Balancing and Settlement Code

Code of Practice Eleven

CODE OF PRACTICE FOR THE METERING OF BALANCING SERVICES ASSETS FOR SETTLEMENT PURPOSES

Issue 1.0

Version 1.0

Date: 30 June 2022

© Elexon Limited 2022

Code of Practice Eleven

CODE OF PRACTICE FOR THE METERING OF BALANCING SERVICES ASSETS FOR SETTLEMENT PURPOSES

1. Reference is made to the Balancing and Settlement Code for the Electricity Industry in Great Britain, and in particular, to the definition of "Code of Practice" in Annex X-1 thereof.

2. This is Code of Practice Eleven, Issue 1.0, Version 1.0.

3. This Code of Practice shall apply to Metering Systems comprising Metering Equipment that are subject to the requirements of Section L of the Balancing and Settlement Code.

4. This Code of Practice is effective from 30 June 2022.

5. This Code of Practice has been approved by the Panel.

Intellectual Property Rights, Copyright and Disclaimer

The copyright and other intellectual property rights in this document are vested in Elexon or appear with the consent of the copyright owner. These materials are made available for you for the purposes of your participation in the electricity industry. If you have an interest in the electricity industry, you may view, download, copy, distribute, modify, transmit, publish, sell or create derivative works (in whatever format) from this document or in other cases use for personal academic or other non-commercial purposes. All copyright and other proprietary notices contained in the document must be retained on any copy you make.

All other rights of the copyright owner not expressly dealt with above are reserved.

No representation, warranty or guarantee is made that the information in this document is accurate or complete. While care is taken in the collection and provision of this information, Elexon Limited shall not be liable for any errors, omissions, misstatements or mistakes in any information or damages resulting from the use of this information or action taken in reliance on it.

© Elexon Limited 2022

AMENDMENT RECORD

Issue	Date	Version	Description of Changes	Changes Included	Mods/ Panel/ Committee Refs
1.0	30/06/2022	1.0	June 2022 Standard Release	P433	P322/02

© Elexon Limited 2022

CONTENTS

		Page Number
FOREWORD		5
1.	SCOPE	6
2.	REFERENCES	7
3.	DEFINITIONS AND INTERPRETATIONS	7
4.	MEASUREMENT CRITERIA	16
5.	ACCURACY REQUIREMENTS	16
6.	METERING EQUIPMENT CRITERIA	19
7.	TESTING FACILITIES	31
8.	SEALING	31
9.	COMMISSIONING AND PROVING	32
10.	SINGLE LINE DIAGRAM	33
11.	Asset Differencing	33
12.	RECORD KEEPING	34
APPENDIX A – DEFINED METERING AT THE ASSET POINT		37
APPENDIX B – IMPORT/EXPORT CONVENTION		40
APPENDIX C – HALF HOURLY INTEGRAL OUTSTATION / SEPARATE OUTSTATION REQUIREMENTS		41
1.	Outstation	41
2.	Displays	42
3.	Data storage	43
4.	Time Keeping	43
5.	Monitoring Facilities	43
6.	Communications	44
7.	Local Interrogation	45
8.	Remote Interrogation	45
APPENDIX E – SINGLE LINE DIAGRAM REQUIREMENTS		51
APPENDIX F – ASSET METERING COMPLEX SITE SUPPLEMENTARY INFORMATION FORM (COP11/FA)		52

© Elexon Limited 2022

FOREWORD

This Code of Practice defines the minimum requirements for the Metering Equipment required for the measurement and recording of electricity transfers at Defined Metering at the Asset Points, for Settlement purposes (i.e. to and from an Asset). This Code of Practice is only applicable to the Metering Equipment located at an Asset providing a Balancing Service[1], and comprised within a Secondary BM Unit (BMU) which is located behind a Boundary Point Metering System. The minimum requirements are either based on the rated capacity of the circuit or the Maximum Demand of the circuit, as applicable.

References to circuit in this Code of Practice refer to the circuit at the Defined Metering at the Asset Point.

For the avoidance of doubt this Code of Practice is **not** relevant to Metering Equipment comprised within a Boundary Point Metering System(s)[2]. For the Metering Equipment requirements for Boundary Point Metering Systems refer to the relevant Code of Practice 1, 2, 3, 5 and 10 as applicable, and to Code of Practice 4 for calibration, testing and commissioning requirements.

For the purpose of this Code of Practice the rated circuit capacity in MVA for Asset Metering Types 1, 2 and 3 shall be determined by the lowest rated primary plant (e.g. transformer rating, line rating, etc) of the circuit. The Metering Equipment provision and accuracy requirements shall anticipate any future uprating consistent with the installed primary plant. The primary plant maximum continuous ratings shall be used in this assessment.

For the purpose of this Code of Practice the Maximum Demand of the electricity being transferred by a circuit shall not exceed 1MW or 100kW for Asset Metering Types 4 and 5, respectively.

For the purpose of this Code of Practice, the use of summation current transformers shall not be permitted. The use of interposing current transformers is permitted providing the Overall Accuracy of the Asset Metering System is maintained.

Where individual items of Metering Equipment are to be replaced, then only those items need to comply with the most up to date version of this Code of Practice and be commissioned at that time in accordance with Section 9 – Commissioning and Proving. For clarification, Asset Metering Systems in their entirety do not need to be replaced and recommissioned when items are replaced within that system unless there is a material change to the Asset Metering System.

Where a material change to an Asset Metering System takes place, then this Metering System must be modified to comply with the most up to date version of this Code of Practice. Changes to an Asset Metering System are considered to be material where they constitute a change to:

i. Switchgear containing measurement transformers; and/or
ii. The primary plant associated with the Asset Metering System i.e. measurement transformers.

[1] Where Asset Differencing is being utilised the Asset Metering may be installed at a point so as to measure and record the transfers of electricity at the Independent Load rather than at the Asset.
[2] This includes Supplier Meter Registration Service Metering Systems embedded within a Private Network

© Elexon Limited 2022

BSCCo shall retain copies of, inter alia, this Code of Practice together with copies of all documents referred to in it, in accordance with the provisions of the Balancing and Settlement Code ("the Code").

1. SCOPE

This Code of Practice states the practices that shall be employed, and the facilities that shall be provided for the measurement and recording of the quantities required for Settlement purposes on each circuit at an Asset providing a Balancing Service, and comprised within a Secondary BMU which is behind a Boundary Point Metering System.

Metering Equipment for Assets can be at multiple locations (i.e. on multiple circuits) behind the Boundary Point Metering System or, in the case of Asset Differencing, at the circuit(s) for the Independent Load(s).

This Code of Practice applies equally to "whole current" (direct connected) metering and metering supplied via measurement transformers operating at high or low voltages.

Metering Dispensations from the requirements of this Code of Practice may be sought in accordance with the Code and BSCP32.

Asset Meters and Outstations referred to in this Code of Practice shall only achieve successful compliance in respect of any testing detailed in this Code of Practice if the requirements set out in accordance with BSCP601 are also observed and successfully completed or the Registrant has been granted a valid Metering Dispensation covering any departure from the requirements as detailed in this Code of Practice.

In the event of an inconsistency between the provisions of this Code of Practice and the Code, the provisions of the Code shall prevail.

© Elexon Limited 2022

2. REFERENCES

The following documents are referred to in the text:-

BS EN/IEC 62053-21	Electricity metering equipment - Particular requirements – Part 21: Static meters for AC active energy (classes 0,5, 1 and 2)
BS EN/IEC 62053-22	Electricity metering equipment - Particular requirements - Part 22: Static meters for AC active energy (classes 0,1S, 0,2S and 0,5S)
BS EN 50470-3	Electricity metering equipment (a.c.). Particular requirements. Static meters for active energy (class indexes A, B and C)
BS EN/IEC 61557-12	Electrical safety in low voltage distribution systems up to 1000 V a.c. and 1500 V d.c. Equipment for testing, measuring or monitoring of protective measures. Performance measuring and monitoring devices (PMD)
BS EN/IEC 60688	Electrical measuring transducers for converting a.c. electrical quantities to analogue or digital signals
BS EN/IEC 61869-2	Instrument transformers. Additional requirements for current transformers
BS EN/IEC 61869-3	Instrument transformers. Additional requirements for inductive voltage transformers
BS EN/IEC 61869-4	Instrument Transformers. Additional requirements for combined transformers
BS EN/IEC 62056-21	Electricity metering. Data exchange for meter reading, tariff and load control. Direct local data exchange
BS EN/IEC 62052-11	Electricity Metering Equipment – General Requirements, Tests and Test Conditions – Part 11: Metering Equipment

3. DEFINITIONS AND INTERPRETATIONS

Save as otherwise expressly provided herein, words and expressions used in this Code of Practice shall have the meanings attributed to them in the Code and are included for the purpose of clarification.
Note: * indicates definitions in the Code.
Note: † indicates definitions which supplement or complement those in the Code.
Note: ‡ indicates definitions specific to this Code of Practice

3.1. 100kW Metering System *

100kW Metering System has the meaning given to that term in Annex X-1[3] of the Code.

3.2. Accredited Laboratory ‡

Accredited Laboratory means the National Physical Laboratory (NPL), or a calibration laboratory that has been accredited by the United Kingdom Accreditation Service (UKAS), or a similarly accredited international body.

[3] https://www.elexon.co.uk/the-bsc/bsc-section-x-annex-x-1-general-glossary/

© Elexon Limited 2022

3.3. Active Energy *

Active Energy means the electrical energy produced, flowing or supplied by an electrical circuit during a time interval, and being the integral with respect to time of the instantaneous Active Power, measured in units of watt-hours or standard multiples thereof.

3.4. Active Power *

Active Power means the product of voltage and the in-phase component of alternating current measured in units of watts and standard multiples thereof, that is:-

1,000 Watts = 1 kW
1,000 kW = 1 MW

3.5. Actual Metering at the Asset Point ‡

Actual Metering at the Asset Point means the physical location at which electricity is metered.

3.6. Affected Party ‡

Affected Party may include customers; Virtual Lead Parties; and any Party other than the Registrant responsible for aggregation rules relating to such Metering Equipment.

3.7. Apparatus *

Apparatus means all equipment in which electrical conductors are used or supported or of which they form part.

3.8. Apparent Energy ‡

Apparent Energy means the integral with respect to time of the Apparent Power.

3.9. Apparent Power ‡

Apparent Power means the product of voltage and current measured in units of volt-amperes and standard multiples thereof, that is:-

1,000 VA = 1 kVA
1,000 kVA = 1 MVA

3.10. Asset ‡

Plant and Apparatus used to deliver a Balancing Service and comprised within a Secondary BMU.

3.11. Asset Differencing ‡

Asset Differencing is an arrangement where the metered data of the Asset Dependent Load are determined by subtracting Asset Metering metered data for all load not constituting the relevant Asset Dependent Load from the Boundary Point Metering System metered data; as illustrated in Figure 5 of Appendix A.

This can be Asset Metering measuring all of the Independent Load, or all the Dependant Load for a Dispatchable Asset for another Party, behind the Boundary Point Metering System that the Dispatchable Asset is located.

3.12. Asset Export ‡

Asset Export means, for the purposes of this Code of Practice, an electricity flow as indicated in Figure 6 of Appendix B.

© Elexon Limited 2022

3.13. Asset Export ID ‡

Asset Export ID means the Asset Metering System Number of a Metering System which measures Asset Exports.

3.14. Asset Import ‡

Asset Import means, for the purposes of this Code of Practice, an electricity flow as indicated in Figure 6 of Appendix B.

3.15. Asset Import ID ‡

Asset Import ID means the Asset Metering System Number of a Metering System which measures Asset Imports.

3.16. Asset Meter ‡

Asset Meter means a device for measuring Active Power and/or Active Energy. It includes:

- An Asset Meter approved[4] for use in Code of Practice 1, 2, 3, 5 and 10 that is a Half Hourly Integral Outstation Meter;
- An Asset Meter whose primary purpose is the measurement of Active Power and/or Active Energy that is **not** an approved[4] Half Hourly Integral Outstation Meter; and
- An Asset Meter whose primary purpose is **not** the measurement of Active Power and/or Active Energy and is **not** a Half Hourly Integral Outstation Meter. These Embedded Metering Devices are embedded within equipment used for purposes other than the measurement of Active Power and/or Active Energy, such as an EV charging unit or a small scale domestic battery storage unit.

3.17. Asset Metering Point ‡

Asset Metering Point means the point at which a supply to (Asset Import) or from (Asset Export) an Asset is or is intended to be measured.

3.18. Asset Metering System ‡

Asset Metering System means particular commissioned Metering Equipment used for the measurement and recording of electricity transfers at, or referred to, the Defined Metering at the Asset Points.

3.19. Asset Metering System Number ‡

Asset Metering System Number means a unique number relating to an Asset Metering Point.

3.20. Asset Metering Type ‡

Asset Metering Type means the category of Metering Equipment required to be compliant with this Code of Practice. The categories are split by the rated capacity of the circuit being measured or by the Maximum Demand of the energy transfers of the circuit being measured. There are five categories:

(i) Asset Metering Type 1 - Metering of circuits with a rated capacity greater than 100MVA;

(ii) Asset Metering Type 2 - Metering of circuits with a rated capacity not exceeding 100MVA;

(iii) Asset Metering Type 3 - Metering of circuits with a rated capacity not exceeding 10MVA;

[4] Meters that are Half Hourly Integral Outstation Meters and which comply with the relevant requirements set out in Code of Practice 1, 2, 3, 5 or 10, as the case may be, and which have been approved for use in accordance with BSCP601 (or are subject to any approved Metering Dispensation covering any departure from the requirement(s) detailed in the relevant Code of Practice).

© Elexon Limited 2022

(iv) Asset Metering Type 4 - Metering of energy transfers with a Maximum Demand of up to (and including) 1MW; and
(v) Asset Metering Type 5 - Metering (embedded within another device) for energy transfers with a Maximum Demand of up to (and including) 100kW.

3.21. Associated Distribution System *
Associated Distribution System has the meaning given to that term in Annex X-1[5] of the Code.

3.22. Auxiliary Load ‡
Auxiliary Load means the total amount of electricity used by a Generating Unit for purposes directly related to its operation, whether or not that electricity is generated by the unit or used while the unit is generating electricity.

3.23. Balancing Service *
Balancing Service has the meaning given to that in the Transmission Licence.

3.24. Boundary Point *
Boundary Point means a point at which any Plant or Apparatus not forming part of the Total System is connected to the Total System.

3.25. Boundary Point Metering System *
The Boundary Point Metering System means a Metering System which measures Exports or Imports at a Boundary Point.

3.26. British Summer Time ‡
British Summer Time means the period when the clocks are one hour ahead of Co-ordinated Universal Time.

3.27. Co-ordinated Universal Time *
Co-ordinated Universal Time bears the same meaning as in the document Standard Frequency and Time Signal Emission, International Telecommunication Union - RTF.460 (ISBN 92-61-05311-4) (colloquially referred to as Rugby Time). Also known as Greenwich Mean Time (GMT).

3.28. Commissioning ‡
Commissioning means a process to ensure that the energy flowing across a Defined Metering at the Asset Point is accurately recorded by the associated Asset Metering System.

3.29. Compensation ‡
Compensation means changes made to the Asset Meter’s basic accuracy that have been deliberately made to the measurement characteristics of that Asset Meter.

3.30. Data Collector ‡
Data Collector means an agent appointed by an Asset Metering Virtual Lead Party to retrieve, validate and process metering data in relation to Asset Metering Systems;

[5] https://www.elexon.co.uk/the-bsc/bsc-section-x-annex-x-1-general-glossary/

© Elexon Limited 2022

3.31. Data Retriever Instation ‡

Data Retriever Instation means a computer based system which collects or receives data on a routine basis from an Asset Meter's Outstation by the relevant Data Collector. This system may also be used to collect or receive data for other purposes such as for a Balancing Service for the National Electricity Transmission System Operator or the Capacity Market.

3.32. Defined Metering at the Asset Point ‡

Defined Metering at the Asset Point means the physical location at which the Overall Accuracy requirement as stated in this Code of Practice are to be met. The Defined Metering at the Asset Point is identified in Appendix A and relates to metering at the Asset for Dependent Load of that Asset. For a Generating Unit this must be in such a position(s) to determine Net Output.

3.33. Demand Period ‡

Demand Period means the period over which Active Energy, Reactive Energy or Apparent Energy are integrated to produce Demand Values. For Settlement purposes, currently each Demand Period shall be of 30 minutes duration, one of which shall finish at 24:00 hours.
The Asset Metering System must be capable of other durations, these being 20, 15, 10 and 5 minutes with one Demand Period ending on the hour, should the requirements of Settlement Period change.

3.34. Demand Values ‡

Demand Values, expressed in MW, Mvar or MVA, means twice the value of MWh, Mvarh or MVAh recorded during any Demand Period (Please note that these Demand Values are for use with Metering Systems using Asset Metering Types 1 and 2. Metering Systems using Asset Metering Types 3, 4 and 5 shall use units a factor of 10^3 smaller (e.g. kW rather than MW).
The Demand Values are half hour demands and these are identified by the time of the end of the Demand Period.

Where Settlement requires a Demand Period that is not of 30 minutes duration the relationship between Watts (W) and Watt-hours (Wh) will be:

$$Watts\ (W) = \left(\frac{60\ minutes}{Demand\ Period\ Duration\ (minutes)}\right) \times Wh$$

For example, a 15 minutes Demand Period duration would mean that Demand Values expressed in MW are four times the value of MWh recorded during the Demand Period.

3.35. Dependent Load ‡

A Dependent Load is any source of demand, or generation that is directly associated with the Dispatchable Asset. This includes the output of the Asset itself and any circuit that will change its mode of operation or level of output in direct response to the Dispatchable Asset being activated. For a Generating Unit Dependent Load must include all Auxiliary Load for that Generating Unit and the generated output.

3.36. Dispatchable Asset ‡

An Asset that is controllable and despatched on request to deliver a Balancing Service. These Assets can be a source of generation or a demand that can be switched on, off, or modulated as required.

© Elexon Limited 2022

3.37. Distribution Licence *
Distribution Licence has the meaning given to that term in Annex X-1[6] of the Code.

3.38. Distribution System *
Distribution System has the meaning given to that term in Annex X-1[6] of the Code.

3.39. Electricity *
"electricity" means Active Energy and Reactive Energy.

3.40. Embedded Metering Device ‡
Embedded Metering Device means an Asset Meter, measuring Active Power and/or Active Energy that is embedded within equipment used for other purposes (e.g. an EV charging unit or a small scale domestic battery storage unit) and is **not** a dedicated meter, i.e. one whose primary purpose is to measure Active Power and/or Active Energy.

3.41. Equipment Owner *
Equipment Owner means, in relation to a Metering System, a person which is the owner of Metering Equipment comprised in that Metering System but is not the Registrant of that Metering System.

3.42. Export *
Export means, in relation to a Party, a flow of electricity at any instant in time from any Plant or Apparatus (not comprising part of the Total System) of that Party to the Plant or Apparatus (comprising part of the Total System) of a Party;

3.43. Generating Unit *
Generating Unit means any Apparatus which produces electricity.

3.44. Grid Code *
Grid Code has the meaning given to that term in the Transmission Licence.

3.45. Half Hourly Integral Outstation Meter ‡
Half Hourly Integral Outstation Meter means an Asset Meter that is capable of measuring and recording Active Energy in Demand Period format; and is capable of two way remote communication.

3.46. Import *
Import means, in relation to a Party, a flow of electricity at any instant in time to any Plant or Apparatus (not comprising part of the Total System) of that Party from the Plant or Apparatus (comprising part of the Total System) of a Party.

3.47. Independent Load ‡
An Independant Load is any source of demand, or generation that is **not** directly associated with the Dispatchable Asset but is located behind the same Boundary Point Metering System. This includes any circuit that will **not** change its mode of operation or level of output in direct response to the Dispatchable Asset being despatched.

[6] https://www.elexon.co.uk/the-bsc/bsc-section-x-annex-x-1-general-glossary/

© Elexon Limited 2022

3.48. Instation ‡
Instation means either a Settlement Instation or a Data Retriever Instation.

3.49. Interrogation Unit ‡
Interrogation Unit means a hand held unit, local interrogation unit, or portable computer which can enter Outstation parameters and extract information from the Outstation and store this for later retrieval.

3.50. Licensed Distribution System Operator *
Licensed Distribution System Operator means a Party which holds a Distribution Licence in respect of distribution activities in Great Britain, acting in that capacity.

3.51. Maximum Demand ‡
Maximum Demand means for Active Power expressed in kW means twice the greatest number of kWh recorded during any Demand Period. This is for both Asset Import and Asset Export.

3.52. Measured Quantity ‡
Measured Quantity means the value of MWh, Mvarh or MVAh recorded during any Demand Period (Please note that these Measured Quantities are for use with Metering Systems using Asset Metering Types 1 and 2. Metering Systems using Asset Metering Types 3, 4 and 5 shall use units a factor of 10^3 smaller e.g. kWh rather than MWh).

3.53. Metering Equipment ‡
Metering Equipment means meters, measurement transformers (voltage, current and combination units), metering protection equipment including alarms, circuitry, associated Communications Equipment and Outstation and wiring.

3.54. Meter Register ‡
Meter Register means a device, normally associated with a Meter, from which it is possible to obtain a reading of the amount of Active Energy that has been supplied by a circuit.

3.55. Metering System Identifier Pair ‡
Metering System Identifier Pair means one Import MPAN and, where applicable, one Export MPAN for a Boundary Point Metering System.

3.56. National Electricity Transmission System Operator *
National Electricity Transmission System Operator means National Grid Electricity System Operator Limited, registered number 11014226 whose registered office is 1-3 Strand, London WC2N 5EH, as the holder of the Transmission Licence in relation to which Section C (system operator standard conditions) of the standard Transmission Licence conditions applies and any reference to "NETSO", "NGESO", ”National Grid Company” or “NGC” in the Code or any Code Subsidiary Document shall have the same meaning.

3.57. Net Output ‡
Net Output means the amount of electricity produced by a Generating Unit minus its Auxiliary Load or in the case of a battery storage unit(s) the amount of electricity exported from the battery storage unit(s).

© Elexon Limited 2022

3.58. Offshore Transmission System *

Offshore Transmission System has the meaning given to that term in the Grid Code and, for the purposes of the Code, shall include Offshore Transmission System User Assets.

3.59. Offshore Transmission System User Assets *

Offshore Transmission System User Assets has the meaning given to that term in the Grid Code.

3.60. Outstation ‡

Outstation means equipment which receives and stores data from an Asset Meter(s) for the purpose, inter-alia, of transfer of that metering data to the relevant Data Collector as the case may be and which may perform some processing before such transfer and may be in one or more separate units or may be integral with the Asset Meter (i.e. a Half Hourly Integral Outstation Meter).

3.61. Overall Accuracy ‡

Overall Accuracy means the difference between the measured energy and the true energy at the Defined Metering at the Asset Point after taking account of all Compensations deliberately set into the Asset Meter and is expressed as a percentage of the true energy. The Overall Accuracy criteria for an Asset Metering System is as stated for the relevant Asset Metering Type in this Code of Practice.

3.62. Password ‡

For a Half Hourly Integral Outstation Meter approved in accordance with BSCP601 for use under Code of Practice 1, 2, 3 and 5 (see Section 6.1) Metering Systems: 'Password' means a string of characters of length no less than six characters and no more than twelve characters, where each character is a case insensitive or sensitive alpha character (A to Z) or a digit (0 to 9) or the underscore character (_).

For a Half Hourly Integral Outstation Meter approved in accordance with BSCP601 for use under Code of Practice 10 (see Section 6.1) a security regime shall be provided to prevent unauthorised access to the data in the Metering Equipment.
For the purposes of this Code of Practice a three level security regime shall be provided as per levels 1, 2 and 3 in Appendix C Section 6 of this Code of Practice.
For separate Outstations (see Appendix C Section 6.1 of this Code of Practice): a Password may be described as above for a Half Hourly Integral Outstation Meter or a single password of any format (Asset Meters separate from their Outstation and capable of external communications should have the same password requirements as for separate Outstations).

3.63. Plant *

Plant means fixed or movable items used in the generation, supply, distribution and/or transmission of electricity, other than Apparatus.

3.64. Proving Test ‡

Proving Test means with respect to an Asset Metering System, a test to confirm that the stored metered data associated with the Asset Import, or Asset Export, or alternatively provided by supply injection, and derived from a fully Commissioned and BSC compliant Asset Metering System at a site, can be satisfactorily transferred via a suitable communications link to, and correctly recorded by, the relevant Data Collector's Instation.

© Elexon Limited 2022

3.65. Rated Measuring Current ‡

Rated Measuring Current means the rated primary current; for whole current (direct connected) meters this is the maximum current (I_{max}) the meter is designed to operate at and for measurement transformer meters this is the rated primary current of the current transformers in primary plant used for measurement purposes.

3.66. Reactive Energy *

Reactive Energy means the integral with respect to time of the Reactive Power and, for the purpose of the Code, is comprised of Active Export related Reactive Energy and Active Import related Reactive Energy.

3.67. Reactive Power *

Reactive Power means the product of voltage and current and the sine of the phase angle between them, measured in units of volt-amperes reactive and standard multiples thereof, that is:-

1,000 vars = 1 kvar
1,000 kvar = 1 Mvar

3.68. Retail Energy Code Energy *

Retail Energy Code has the meaning given to the term "Retail Energy Code" in each Supply Licence.

3.69. Settlement Instation ‡

Settlement Instation means a computer based system which collects or receives data on a routine basis from an Asset Meter's Outstation by the relevant Data Collector.

3.70. Settlement Period ‡

Settlement Period means a period of 30 minutes beginning on the hour or the half-hour.

3.71. Single Line Diagram ‡

A simplified notation for representing a three-phase power system that must show, the relevant Asset and associated Asset Metering System, Independent and Dependent Load circuits behind a Boundary Point Metering System. The Single Line Diagram must also show that Boundary Point Metering System.

3.72. Supplier Meter Registration Service *

Supplier Meter Registration Service means the service provided or to be provided by a Licensed Distribution System Operator for the registration of Metering Systems at Boundary Points on its Distribution System(s) and its Associated Distribution System(s) (if any), in accordance with the Retail Energy Code.

3.73. Transmission Licence *

Transmission Licence means a licence granted or treated as granted to the NETSO under section 6(l) (b) of the Act.

© Elexon Limited 2022

3.74. Transmission System *

Transmission System has the meaning given to the term 'National Electricity Transmission System' in the Transmission Licence except that prior to the BETTA Effective Date every reference to Great Britain and Offshore in such term shall be deemed to be a reference to England and Wales.

3.75. Total System *

Total System means the Transmission System, each Offshore Transmission System User Asset and each Distribution System.

4. MEASUREMENT CRITERIA

Asset Meters can be designed to measure Active Power and/or Active Energy; the functionality of the Asset Meter may be that it only records or transmits metered data to an Instation in one of these formats (i.e. power or energy). Dependant on the functionality of the Asset Meter one or both of the Measured Quantities and/or Demand Values may be applicable. Where only one is available refer to Section 4.1 or 4.2 as applicable.

4.1 Measured Quantities

For each separate circuit, as a minimum one of the following Active Energy measurements are required for metering at an Asset:-

(i) Import kWh/MWh*
(ii) Export kWh/MWh*

* Asset Import and/or Asset Export metering need only be installed where the circuit being metered is capable of import and/or export flows of energy.

4.2 Demand Values

For each separate circuit, as a minimum one of the following Active Power measurements are required for metering at the Asset:-

(i) Import kW/MW*
(ii) Export kW/MW*

* Asset Import and/or Asset Export metering need only be installed where the circuit being metered is capable of import and/or export flows of energy.

5. ACCURACY REQUIREMENTS

The Overall Accuracy of the energy measurements at or referred to[7] a Defined Metering at the Asset Point shall at all times be within the limits of error for the applicable Asset Metering Type as shown below:

[7] An approved Metering Dispensation may be in place for the Actual Metering at the Asset Point not being at the Defined Metering at the Asset Point where the Registrant wishes to apply accuracy Compensation for power transformer and/or line losses or inverter losses or rectifier losses where these are considered, by the Registrant or an Affected Party, to have a material impact on metered data.

© Elexon Limited 2022

Table 1: Asset Metering Type 1 - Metering of circuits with a rated capacity greater than 100MVA

CONDITION	**LIMITS OF ERROR AT STATED SYSTEM POWER FACTOR**	
Current expressed as a percentage of Rated Measuring Current	Power Factor	Limits of Error
120% to 10% inclusive Below 10% to 5% Below 5% to 1% 120% to 10% inclusive	1 1 1 0.5 lag and 0.8 lead	± 0.5% ± 0.7% ± 1.5% ± 1.0%

Table 2: Asset Metering Type 2 - Metering of circuits with a rated capacity not exceeding 100MVA

CONDITION	**LIMITS OF ERROR AT STATED SYSTEM POWER FACTOR**	
Current expressed as a percentage of Rated Measuring Current	Power Factor	Limits of Error
120% to 10% inclusive Below 10% to 5% Below 5% to 1% 120% to 10% inclusive	1 1 1 0.5 lag and 0.8 lead	± 1.0% ± 1.5% ± 2.5% ± 2.0%

Table 3: Asset Metering Type 3 - Metering of circuits with a rated capacity not exceeding 10MVA

CONDITION	**LIMITS OF ERROR AT STATED SYSTEM POWER FACTOR**	
Current expressed as a percentage of Rated Measuring Current	Power Factor	Limits of Error
120% to 10% inclusive Below 10% to 5% 120% to 10% inclusive	1 1 0.5 lag and 0.8 lead	± 1.5% ± 2.0% ± 2.5%

© Elexon Limited 2022

Table 4: Asset Metering Type 4 - Metering of energy transfers with a Maximum Demand of up to (and including) 1MW

CONDITION		**LIMITS OF ERROR AT STATED SYSTEM POWER FACTOR**	
Current expressed as a percentage of Rated Measuring Current	Transformer Connected / Whole Current	Power Factor	Limits of Error
100% to 20% inclusive Below 20% to 5% 100% to 20% inclusive	Transformer Connected	1 1 0.5 lag and 0.8 lead	± 1.5% ± 2.5% ± 2.5%
100% to 5% inclusive	Whole Current	All	+2.5% to –3.5%

Table 5: Asset Metering Type 5 - Metering (embedded within equipment) for energy transfers with a Maximum Demand of up to (and including) 100kW

CONDITION	**LIMITS OF ERROR AT STATED SYSTEM POWER FACTOR**	
Current expressed as the operational range of the device	Power Factor	Limits of Error[8]
I_n to I_{max} inclusive	All	+2.5% to –3.5%

Where I_n[9] is the nominal current the device is designed to operate at and I_{max} is the maximum current the device is designed to operate at. For example, if a device was designed to only operate in the 6A-32A range I_n would be 6A and I_{max} 32A.

5.1 Compensation for Measurement Transformer Error

To achieve the Overall Accuracy requirements it may be necessary to compensate Asset Meters for the error of the measurement transformers and the associated leads to the Asset Meters. Values of the Compensation shall be recorded and evidence to justify the Compensation criteria, including wherever possible test certificates, shall be available for inspection by the Panel or Technical Assurance Agent.

5.2. Compensation for Power Transformer and/or Line Losses or Inverter Losses or Rectifier Losses

Where the Actual Metering at the Asset Point and the Defined Metering at the Asset Point do not coincide the Registrant may wish to apply accuracy Compensation for power transformer and/or line losses or inverter losses or rectifier losses where these are considered, by the Registrant or an Affected Party, to have a material[10] impact on metered data. Where accuracy Compensations are to be applied then a Metering Dispensation shall be applied for and

[8] The overall in-service accuracy limits defined are at any load at which the Metering Equipment is designed to operate.
[9] The lowest value of current that will meet the accuracy requirements as specified by the manufacturer.
[10] Material impact is where the effect of the power transformer and/or line losses or inverter losses or rectifier losses results in the metered data referred to the Defined Metering at the Asset Point not meeting the relevant Overall Accuracy permissible limits of error.

© Elexon Limited 2022

accuracy Compensation for power transformer and/or line losses or inverter losses or rectifier losses shall be provided to meet the Overall Accuracy at the Defined Metering at the Asset Point.

Where accuracy Compensation for power transformer and/or line losses or inverter losses or rectifier losses is provided or applied the values used shall be validated in accordance with BSCP32 'Metering Dispensations', recorded and supporting evidence to justify the accuracy Compensation criteria shall be available for inspection by the Panel or Technical Assurance Agent.

6. METERING EQUIPMENT CRITERIA

Users[11] of this Code of Practice shall ensure that all Metering Equipment is:

- installed and commissioned (if not already installed and commissioned); and
- maintained and operated.

in accordance with this Code of Practice.

6.1 Asset Meters

Asset Meters can be split into three categories as described below:

1) An Asset Meter approved for use under Code of Practice 1, 2, 3, 5 and 10 that is a Half Hourly Integral Outstation Meter. See Section 6.1.1;

2) An Asset Meter whose primary purpose is the measurement of Active Power and/or Active Energy that is **not** a Half Hourly Integral Outstation Meter approved for use under Code of Practice 1, 2, 3, 5 and 10. See Section 6.1.2; and

3) An Asset Meter whose primary purpose is **not** the measurement of Active Power and/or Active Energy and is **not** a Half Hourly Integral Outstation Meter. These Embedded Metering Devices are embedded within equipment used for purposes other than the measurement of Active Power and/or Active Energy, such as an EV charging unit or a small scale domestic battery storage unit. See Section 6.1.3.

For each circuit Asset Meters do not need to be replaced as long as the Asset Meter continues to meet the stipulated accuracy requirements, however the Asset Meter must be re-calibrated every 10 years from the date of manufacture for Asset Metering Types 1 and 2; and every 15 years from the date of manufacture for Asset Metering Types 3 and 4 (transformer connected only); for Asset Metering Type 4 (whole current) and 5 the Asset Meter or Embedded Metering Device should be designed by the manufacturer to remain accurate for the life expectancy of the Asset Meter or equipment containing the Embedded Metering Device.

Should the Panel require it, evidence of continued compliance of an Asset Meter or Embedded Metering Device to the relevant standard or accuracy limits specified in this Code of Practice shall be made available for inspection to the Panel or Technical Assurance Agent. This evidence can be from calibration tests on an Asset Meter or equipment containing an Embedded Metering Device on a device removed from site where it was no longer required, but where no device(s) are available, the Registrant will be required to remove the device(s) from site for test or arrange to test them at site. The Panel will determine the number of Asset Meters or

[11] Virtual Lead Parties and their appointed Asset Metering Equipment installers.

© Elexon Limited 2022

Embedded Metering Devices it requires to be tested to confirm continued compliance with the allowed limits of error for the relevant accuracy.

Asset Metering Systems should include an ability to record or convert data into energy in a Demand Period format, this can either be done by:

- Outstation functionality that can be either integrated or separate to the Asset Meter; or
- Data Retriever Instation.

Asset Meters should have a calibration test certificate indicating conformity with the accuracy requirements appropriate to the Asset Meter Type, accuracy class and relevant standard (if applicable). This can be a certificate of conformity for a batch of Asset Meters or Embedded Metering Devices where it is confirmed that the specified serial numbers meet the relevant accuracy class. For transformer connected Asset Meters consideration shall be given as to whether it can be demonstrated that the allowed limits for Accuracy Requirements (see Section 5) have been met if only a certificate of conformity is requested from the Asset Meter manufacturer rather than a calibration test certificate with percentage error test results.

The test equipment used to test the Asset Meter shall be traceable to an Accredited Laboratory.

Asset Meters shall be configured such that the number of measuring elements is equal to or one less than the number of primary system conductors. These include the neutral conductor, and/or the earth conductor where system configurations enable the flow of zero sequence energy.

Asset Meters supplied via measurement transformers shall be set to the actual primary and secondary ratings of the measurement transformers and the ratios displayed as follows:

a) for Asset Meters separate from the display and/or Outstation the ratios shall be recorded on the nameplate of the Asset Meter; and
b) for Asset Meters combined with the display the ratios shall be displayed.

6.1.1 Half Hourly Integral Outstation Meters (Approved for use under Code of Practice 1, 2, 3, 5 and 10) used as Asset Meters

For Asset Metering Types 1, 2 and 3 circuits shall be measured by both main and check Asset Meters.

Half Hourly Integral Outstation Meters and separate Outstations (located at the same location as the Half Hourly Integral Outstation Meters) data shall be to a format and protocol approved by the Panel in accordance with BSCP601 ‘Metering Protocol Approval and Compliance Testing’. This approval will be for Code of Practices 1, 2, 3, 5 and 10 as applicable.

So long as the minimum accuracy classes for this Code of Practice are met a meter approved for use under Code of Practice 1, 2, 3, 5 and 10 can be used as an Asset Meter; Table 6 shows the equivalence between the Codes of Practices (1, 2, 3, 5 and 10) and the Asset Metering Type.

© Elexon Limited 2022

Table 6: Asset Metering Type Code of Practice Compliance

CODE OF PRACTICE COMPLIANCE	ASSET METERING TYPE
1	1
2	2
3	3
5	4
10	4*a)*
N/A	5

Note a): Code of Practice 10 specifically applies to metering of energy via low voltage circuits for Settlement purposes. Metering Equipment compliant with Code of Practice 10 can be traded either Half Hourly where the Metering Systems are not 100kW Metering Systems (Measurement Class E, F or G) or Non-Half Hourly. A Code of Practice 10 Meter can only be used for Asset Metering Type 4 where the Maximum Demand is below 100kW.

Half Hourly Integral Outstation Meters (where approved through BSCP601 for Code of Practice 1, 2, 3, 5 and 10 as applicable) shall have the facilities, Outstation functionality and communications requirements set out in Appendix C. For Half Hourly Integral Outstation Meters not approved through BSCP601 for Code of Practice 1, 2, 3, 5 and 10 (as applicable) they shall meet the requirements of section 6.1.2.

Half Hourly Integral Outstation Meters shall include a non-volatile Meter Register of cumulative energy for each Measured Quantity[12]. The Meter Register(s) shall not roll-over more than once within a six month period.

The minimum accuracy class for Asset Metering Types 1, 2, 3 and 4 shall be in accordance with Table 7, as applicable.

[12] Asset Import and/or Asset Export Meter Register(s) need only be configured where the circuit being metered is capable of import and/or export flows of energy.

© Elexon Limited 2022

Table 7: Half Hourly Integral Outstation Meters and Asset Meters that measure and record Energy for Asset Metering Type 1, 2, 3 and 4 metering should meet the following criteria:

Asset Metering Type	Relevant Standard		Minimum Class Accuracy
1	BS EN 62053-22	Both	0.2s
2	BS EN 62053-22 BS EN 50470-3	Both	0.5s C
3	BS EN 62053-21 BS EN 50470-3	Both	1 B
4	BS EN 62053-21 BS EN 50470-3	Transformer Connected	1 B
		Whole Current	2 A

The standards quoted are the current standards for Asset Meters at those accuracy classes. Any Asset Meter currently installed pre-dating these standards should meet the applicable standard for that accuracy class at the time of installation.

6.1.2 Asset Meters whose primary purpose is the measurement of Active Power and/or Active Energy that are not approved[13] Half Hourly Integral Outstation Meters

Asset Meters whose primary purpose is the measurement of Active Power and/or Active Energy that are **not** Half Hourly Integral Outstation Meters shall be compliant with a recognised national or international standard etc[14]. For example, IEC 61557-12, IEC 60688 and/or IEC 62053-21 (or IEC 62053-22), as applicable. Other standards may be used so long as they specify an accuracy class in Table 8 of this Code of Practice and include maximum permissible limits of errors for the relevant accuracy classes.

The metered data shall be to a format and protocol approved by the Panel in accordance with BSCP601 'Metering Protocol Approval and Compliance Testing'. For the avoidance of doubt a dedicated Asset Meter is a measuring device whose primary purpose is for the measurement of Active Power and/or Active Energy. For an Asset Meter that is an Embedded Metering Device see Section 6.1.3.

Where the Asset Meter has a display, it shall display; cumulative energy registers[15]; programmed measurement transformer ratios; instantaneous parameters (i.e. power); scaling factors (e.g. the pulse value/scaling factor for a pulse output based on power or energy) programmed to be sent to, or retrieved by an Instation. Where these parameters cannot be

[13] Approved means for Half Hourly Integral Outstation Meters approved through BSCP601 for Code of Practice 1, 2, 3, 5 and 10 (as applicable)
[14] Such as International Electrotechnical Commission (IEC); European Committee for Electrotechnical Standardization (CENELEC); International Organization for Standardization (ISO); British Standards Institution (BSI), etc.
[15] Only where the Asset Meter records Active Energy; not a requirement where the Asset Meter only records Active Power.

© Elexon Limited 2022

shown on the Asset Meter display, the Asset Meter shall have the facility for these parameters to be downloaded either locally or remotely.

Where the Asset Meter has a non-volatile Meter Register that can be shown on the Asset Meter display it shall be configured to display the cumulative energy for each Measured Quantity. The Asset Meter Register(s) shall not roll-over more than once within a six month period.

Where a display functionality is **not** available on the Asset Meter, it shall have a facility to download from the Asset Meter, either locally or remotely: cumulative energy registers; programmed measurement transformer ratios; instantaneous parameters (i.e. power); scaling factors (e.g. the pulse value/scaling factor for a pulse output based on power or energy) programmed to be sent to, or retrieved by an Instation.

An Asset Meter can use push and/or pull methods of communication.

Where the Asset Meter has an internal clock and this clock is the basis for the conversion of metered data into Demand Values submitted for Settlement purposes:

(i) The Asset Meter time shall be set to the Co-ordinated Universal Time (UTC). No switching between UTC and British Summer Time (BST) shall occur for Settlements data storage requirements;

(ii) Time synchronisation of the Asset Meter may be performed remotely by the Instation as part of the remote interrogation process or locally by an Interrogation Unit;

(iii) The overall limits of error for the time keeping allowing for a failure to communicate with the Asset Meter for an extended period of 10 days for Asset Metering Type 1 and 2 or 20 days for Asset Metering Type 3 and 4 shall be:-

(a) the completion of each Demand Period shall be at a time which is within ±10 seconds of UTC for Asset Metering Type 1 and 2 or ±20 seconds of UTC for Asset Metering Type 3 and 4; and

(b) the duration of each Demand Period shall be within ±0.1%, except where time synchronisation has occurred in a Demand Period.

The Instation shall be set in accordance with UTC at least once every day. The Interrogation Unit should be set to ensure agreement with the UTC clock at least every week.

The minimum accuracy class for Asset Metering Types 1, 2, 3 and 4 shall be in accordance with Table 7 (see Section 6.1.1) or Table 8, as applicable.

© Elexon Limited 2022

Table 8: Asset Meters that only measure and record instantaneous Active Power, this includes Asset Meters that are capable of measuring Active Energy but where an instantaneous Active Power output is used to provide data to an Instation for Asset Metering Type 1, 2, 3 and 4 metering should meet the following criteria:

Asset Metering Type	Relevant Standard[16]		Minimum Class Accuracy
1	BS EN 62053-22 IEC 61557-12 IEC 60688	Both	0.2s 0.2
2	BS EN 62053-22 BS EN 50470-3 IEC 61557-12 IEC 60688	Both	0.5s 0.5 C
3	BS EN 62053-22 BS EN 50470-3 IEC 61557-12 IEC 60688	Both	1 B
4	BS EN 62053-22 BS EN 50470-3 IEC 61557-12 IEC 60688	Transformer Connected	1 B
		Whole Current	2 A

The standard quoted is the current standards for meters at those accuracy classes. Any Active Power Asset Meter currently installed pre-dating these standards should meet the applicable standard (BS, BS EN, IEC) at the time of installation for that accuracy class.

6.1.3 Asset Meters whose primary purpose is not the measurement of Active Power and/or Active Energy and are not a Half Hourly Integral Outstation Meter. These Embedded Metering Devices are embedded within equipment used for other purposes.

This Section (6.1.3) is only applicable to Asset Metering Type 5.

Asset Meters that are integrated into equipment used for other purposes must have an integrated Embedded Metering Device that meets the limits of error for power and energy defined in Table 9; the limits of error requirement must include the errors associated with any device used to step down current and/or voltage within the equipment that are making up the Embedded Metering Device. The limits of error apply for the lifetime of the device.

Table 9: Asset Meters embedded within equipment and are an a.c. measuring device should meet the following criteria:

[16] Other standards may be used so long as they specify an accuracy class within Table 8 and include maximum permissible limits of errors for the relevant accuracy classes.

© Elexon Limited 2022

CONDITION			LIMITS OF ERROR AT STATED SYSTEM POWER FACTOR	
Frequency range	Voltage expressed as the operational range of the device	Current expressed as the operational range of the device	Power Factor	Limits of Error
From 49.0 Hz to 51.0 Hz	90% to 110% U_n inclusive[a]	50% I_{max} to I_{max} inclusive I_n to 50% I_{max} I_n to I_{max} inclusive	1 1 0.5 lag and 0.8 lead	± 2.0% ± 2.5% ± 2.5%
a. Where U_n is one of the nominal voltage values for a.c. meters specified in BS ENIEC 62052-11 section 4.1.1 Table 1				

Where the equipment is converting a.c. electrical quantities to d.c. electrical quantities, or converting d.c. electrical quantities to a.c. electrical quantities, the Embedded Metering Device shall be in such a place within the equipment to account for any losses associated with the inverter or rectifier (i.e. is located on the a.c. side of the inverter or rectifier). Where it is not, the losses of the inverter and/or rectifier[17] must be accounted for in the aggregation rule using the Asset Metering Complex Site Supplementary Information Form (CoP11/Fa) (see Appendix F). The losses in the inverter and/or rectifier must be independently verified (in accordance with BSCP601 'Metering Protocol Approval and Compliance Testing' for Code of Practice 11) and results made available for inspection by the Panel or Technical Assurance Agent.

The inverter or rectifier loss tests, where applicable[18], should be for a specific make, model and type and where the inverter or rectifier make, model and type is changed the inverter or rectifier loss tests should be carried out again, as described above. Where the losses have changed the new figure must be used in the Asset Metering Complex Site Supplementary Information Form (CoP11/Fa) (see Appendix F) for the relevant configuration of device.

Where the Embedded Metering Device is a d.c. device it must meet the limits of error for power and energy defined in Table 10; the limits of error requirement must include any d.c. shunts or transducers within the equipment or within the Embedded Metering Device itself that are making up the Embedded Metering Device. The limits of error apply for the lifetime of the device.

[17] Repeatability of the losses must be demonstrated across a number of inverters/rectifiers of the same type and an average figure used
[18] Where the Embedded Metering Device is not on the a.c. side of the inverter or rectifier.

© Elexon Limited 2022

Table 10: Asset Meters embedded within equipment and are a d.c. measuring device should meet the following criteria:

CONDITION		LIMITS OF ERROR AT STATED SYSTEM POWER FACTOR	
Voltage expressed as the operational range of the device	Current expressed as the operational range of the device	Power Factor	Limits of Error
90% to 110% U_n inclusive[a]	50% I_{max} to I_{max} inclusive I_n to 50% I_{max}	N/A N/A	± 2.0% ± 2.5%
a. Where U_n is one of the nominal voltage values for d.c. meters specified in BS EN/IEC 62052-11 section 4.1.1 Table 1			

The equipment shall have a facility to download from the Asset Meter, either locally or remotely: cumulative energy registers; instantaneous parameters (i.e. power); Demand Period energy values[19]: and any scaling factors (e.g. the pulse value/scaling factor for a pulse output based on power or energy) programmed to be sent to, or retrieved by an Instation.

An Asset Meter can use push and/or pull methods of communication.
Where the Asset Meter has an internal clock and this clock is the basis for the conversion of metered data into Demand Values submitted for Settlement:

(i) The Asset Meter time shall be set to the Co-ordinated Universal Time (UTC). No switching between UTC and British Summer Time (BST) shall occur;
(ii) Time synchronisation of the Asset Meter may be performed remotely by the Instation as part of the remote interrogation process or locally by an Interrogation Unit;
(iii)The overall limits of error for the time keeping allowing for a failure to communicate with the Asset Meter for an extended period of 20 days shall be:-
  (a) the completion of each Demand Period shall be at a time which is within ±20 seconds of UTC; and
  (b) the duration of each Demand Period shall be within ±0.1%, except where time synchronisation has occurred in a Demand Period.

The Instation shall be set in accordance with UTC at least once every day. The Interrogation Unit should be set to ensure agreement with the UTC clock at least every week.

The equipment that the Embedded Metering Device is embedded within shall be manufactured and tested to be compliant with the relevant product standard for the equipment.

[19] Where the Asset Meter does not store data in Demand Period format this is not required. In this case the Instation converts the output of the Asset Meter to Demand Period format.

© Elexon Limited 2022

6.1.4 Facilities

Where the Asset Meter is **not** of a Half Hourly Integral Outstation Meter, or does not store metered data in a Demand Period format or is providing data to a separate Outstation the Asset Meter must have a facility to output metered data to an Instation by one of the following methods:

6.1.4.1 Analogue outputs

Any suitable analogue method is allowable under this Code of Practice so long as the relevant accuracy requirement (i.e. Table 7, 8, 9 or 10 as applicable) is maintained, the following two examples are for illustrative purposes.

- Pulse Output – a weighted pulse (e.g. 50kWh/imp) with a suitable rate at full load. For example between 0.1 and 2 pulses per second with a nominal duration of 80mS per pulse;
- Converting a.c. electrical quantities to analogue signals – e.g. Transducer scaled output range (W/mA e.g. 4mA to 20mA).

6.1.4.2 Digital output

Any suitable digital method is allowable under this Code of Practice so long as the relevant accuracy requirement (i.e. Table 7, 8, 9 or 10 as applicable) is maintained, the following examples are for illustrative purposes and not all required by an Asset Meter.

- Converting a.c. electrical quantities to digital signals – e.g. SCADA (Supervisory Control and Data Acquisition), DCS (Distributed Control System), Modbus TCP/IP , including Ethernet

The metered data of the Asset Meter must be monitored by the Half Hourly Data Collector or the Asset Metering Half Hourly Data Collector, as applicable, for inconsistencies with the data. For example, inconsistencies such as frozen Modbus values or long periods of zero values. It is ultimately the responsibility of the Registrant, or their appointed agent, to ensure that the output from an Asset Meter is operating correctly and submitting accurate metered data for the primary energy flowing through the circuit being measured.

Any output (i.e. analogue or digital) from an Asset Meter that is used for Settlement must be compliant with the required accuracy class required for that Asset Metering Type.

Any output (i.e. analogue or digital) must be based on a power or energy value. It cannot be a voltage and current output where the Instation would calculate a value for power or energy using an assumed power factor[20].

The lists in 6.1.4.1 and 6.1.4.2 are not exhaustive and any other suitable method can be used so long as that output is compliant with the required accuracy class required for that Asset Metering Type.

Any output from an Asset Meter to an Instation that is converted by that Instation to a Demand Value in Demand Period format shall have a suitable frequency of outputs, refresh rate, or number of updates, to give an accurate figure, that is within the allowed limits for the relevant accuracy class for the Asset Meter (see Section 6.1 Tables 7, 8, 9 or 10 as applicable), in the

[20] Power factor is only relevant to a.c. systems.

© Elexon Limited 2022

Demand Period where instantaneous values are converted to energy for Settlement purposes. Typically for Balancing Services this will be minute by minute or second by second outputs and a similar regime shall be in place for this Code of Practice for outputs used to create a Demand Value in Demand Period format.

6.1.5 Data Security

An appropriate data security system (e.g. passwords, encryption, etc) should be put in place for the Asset Meters and any transfer of data from them into Settlement. This includes push and pull methods of communication, as applicable to the Asset Meter.

Any default password programmed into an Asset Meter must be changed at the time of installation.

For Half Hourly Integral Outstation Meters and Outstations approved under BSCP601 for Codes of Practice 1, 2, 3, 5 and 10 data security of the Asset Meters should be to the requirements in the relevant Code of Practice. A secure security system in accordance with accepted industry best practice shall be in place for remote communication between the Asset Meter and an Instation.

For all other Asset Meter types a secure security system in accordance with accepted industry best practice shall be in place for where data interfaces involve remote communication, both through a physical connection or by a wireless method, between the Asset Meter and an Instation. Remote communication can be from the Asset Meter to a Data Retriever Instation and the Data Retriever Instation to a Data Collector. This also includes any storage in a cloud environment or an equivalent platform.

A Secure File Transfer Protocol (SFTP), or an equivalent method as agreed with the Data Collector, should be used to transmit data between the Data Retriever Instation and the Data Collector.

Evidence of the data security methodology shall be available for inspection by the Panel or Technical Assurance Agent.

6.2 Measurement Transformers

All measurement transformers shall be of a wound construction.

For each circuit, current transformers (CT) and voltage transformers (VT) shall meet the requirements set out below.

Additionally, where a combined unit measurement transformer (VT and CT) is provided the 'Tests for Accuracy' covering mutual influence effects shall be met.

For Asset Metering Systems that represent low burdens on measurement transformers, consideration shall be given as to whether that operating burden is within the operating range of the measurement transformers. In such cases it may be necessary to add additional burden.

The total burden (i.e. working burden) on each CT and VT shall not exceed the rated burden.

© Elexon Limited 2022

Test certificates for measurement transformers showing errors at the working burden or at burdens which enable the working burden errors to be calculated shall be available for inspection by the Panel or Technical Assurance Agent.

Separately fused VT supplies shall be provided for each of the following:-

(a) the main Asset Meter
(b) the check Asset Meter (if fitted)
(c) any additional burden

Such fuses shall be located as close as practicable to the VT.

The required minimum accuracy class that shall be installed will be to the accuracy class defined in Table 11 and Table 12, as applicable.

Table 11: All current transformers for Asset Metering Type 1, 2, 3 and 4 metering should meet the following criteria[21]:

Asset Metering Type	Relevant Standard	Minimum Class Accuracy	No of Sets	Configuration Requirements
1	IEC 61869-2	0.2s	2	1 Set of CTs shall be dedicated to the main Asset Meter only and 1 set supplying the check Asset Meter. Check Asset Meter CTs can be used for other purposes providing the CoP accuracy requirements are met.
2	IEC 61869-2	0.2s	1	CTs shall be dedicated to Settlement purposes supplying both main Asset Meter and check Asset Meter. An additional set of CTs may be fitted for the check Asset Meter which may also be used for other purposes providing the CoP accuracy requirements are met.
3	IEC 61869-2	0.5	1	1 set of CTs for main Asset Meter and check Asset Meter for Settlement purposes, but can be used for other purposes if the CoP accuracy requirements are met.
4	IEC 61869-2	0.5	1	1 set of CT for the main Asset Meter for Settlement purposes, but the CTs may be used for other purposes provided the CoP accuracy requirements are met.

[21] For a combined transformer IEC 61869-4 is also a relevant standard.

© Elexon Limited 2022

Table 12: The secondary windings of voltage transformers for Asset Metering Type 1, 2, 3 and 4 metering used for Settlement purposes shall meet the following criteria[22]:

Asset Metering Type	Relevant Standard	Minimum Class Accuracy	No of VTs required	Configuration Requirements
1	IEC 61869-3	0.2	2 VTs (or 1 VT with two (2) or more secondary windings)	1 VT secondary winding dedicated to the main Asset Meter for Settlement purposes only. A second VT secondary winding for the check Asset Meter, which may also be used for other purposes providing the CoP accuracy requirements are met.
2	IEC 61869-3	0.5	1	VT secondary winding shall be dedicated to Settlement purposes supplying both main Asset Meter and check Asset Meter. An additional VT or secondary winding may be used for the check Asset Meter which may also be used for other purposes providing the CoP accuracy requirements are met.
3	IEC 61869-3	1	1	1 set of VTs for main Asset Meter and check Asset Meter for Settlement purposes, but can be used for other purposes if CoP accuracy requirements are met.
4	IEC 61869-3	1	1	1 set of VTs for the main Asset Meter for Settlement purposes, but can be used for other purposes if CoP accuracy requirements are met.

The primary winding of voltage transformers shall be connected to the circuits being measured. The standards quoted in Table 11 and Table 12 are the current standards for measurement transformers at those accuracy classes. Any measurement transformer that was installed prior to these standards should meet the applicable standard at the time of installation and be compliant with Section 6.2.1.

Previous standards for current transformers are IEC 60044-1, IEC 185, BS 7626 and BS 3938 (1973 & 1965).

Previous standards for voltage transformers are IEC 60044-2, IEC 186, BS 7625 and BS 3941 (1975 & 1965).

6.2.1 Measurement Transformers Installed on Existing Circuits

Where measurement transformers, other than those newly installed, do not meet, or exceed, the minimum accuracy class specified in Tables 11 and 12 they may be used where the Asset

[22] For a combined transformer IEC 61869-4 is also a relevant standard.

© Elexon Limited 2022

Metering System can be demonstrated to be within the relevant Overall Accuracy allowed limits specified in Section 5 ‘Accuracy Requirements’ in this Code of Practice.

7. TESTING FACILITIES

Where it is reasonably practicable to do so, separate test terminal blocks or equivalent facilities shall be provided for the main Asset Meters and for the check Asset Meters (should a check Asset Meter be installed) of each circuit. The test facilities shall be nearby the Asset Meters involved. Reasonably practicable is considered to be where there is space to install a dedicated metering panel for the Asset Meters.

8. SEALING

All Metering Equipment shall be capable of being secured so as to prevent unauthorised access going undetected.
Asset Meters should be sealed immediately after calibration and prior to leaving the test facility or manufacturer’s facility. Sealing may include the use of a tamper evident seal provided and fitted by the test facility or the manufacturer. Where an Asset Meter is an Embedded Metering Device embedded within equipment used for other purposes that equipment shall be manufactured in such a way so as to prevent unauthorised access going undetected.

© Elexon Limited 2022

9. COMMISSIONING AND PROVING

The Registrant, via its appointed installer, shall be responsible for the Commissioning and Proving Test of all Metering Equipment.

The purpose of Commissioning is to ensure that the energy flowing across a Defined Metering at the Asset Point is accurately recorded by the associated Asset Metering System. The following tests and checks are provided to Commissioning engineers to help ensure this requirement is met (the detail involved in the tests and checks carried out will largely depend on the quantities of energy measured by the associated Asset Metering System).

Commissioning shall be performed on all new Metering Equipment which is to provide metering data for Settlement.

Where required by BSCP603 (Meter Operations and Data Collection for Asset Metering Systems), an end to end test ('Proving Test') shall be performed by the installer of the Asset Meter to prove that primary energy recorded by the Asset Meter (for both main and check Asset Meters (should a check Asset Meter be installed)) over a Demand Period is being transferred and accurately received by the Settlement Instation.

The Commissioning tests required will depend on the type of the Metering Equipment comprised within the Asset Metering System. Appendix D specifies the minimum outputs that each test should confirm dependent on the Metering Equipment comprised within the Asset Metering System.

All Commissioning tests shall be performed on site[23] to confirm and record the output of the Asset Metering System correctly records the energy in the primary system at the Defined Metering at the Asset Point. Asset Meters that are an Embedded Metering Device embedded within equipment used for other purposes shall follow the whole current (direct connected) metering requirements as described in Appendix D.

Where a comparison with the Boundary Point Metering System can demonstrate that the Asset Meter is accurately recording the energy flowing across a Defined Metering at the Asset Point when the Asset is despatched this can be considered a commissioning test so long as the conditions in Appendix D are met.

For the avoidance of doubt, and notwithstanding the obligation under the BSC for the Registrant to ensure compliance, it shall be the responsibility of the relevant installer to ensure that the Asset Metering System complies with the requirements of this Code of Practice including the assessment of Overall Accuracy based on any evidence provided by other parties.

[23] With the exception that current transformers integrated in low voltage cut outs or switchgear may be partially Commissioned off site so long as the conditions in Appendix D are met.

© Elexon Limited 2022

10. SINGLE LINE DIAGRAM

The Registrant is responsible for producing a Single Line Diagram that must include Boundary Point Metering System Identifiers (Asset Metering System Number (there may be an Asset Import ID and/or Asset Export ID, MSID Pair ID(s)); site dependent and independent load and locations of all Metering Systems both at the Asset and the Boundary Point. The Single Line Diagram shall be available for inspection by the Panel or Technical Assurance Agent.
No Single Line Diagram is required for Asset Metering Type 4 that is whole current and Asset Metering Type 5.
An example can be seen in Appendix E.

11. Asset Differencing

Asset Differencing is the process where metered data for an Asset is derived from the metered data of a Boundary Point Metering System and an Asset Metering System located behind the relevant Boundary Point Metering System, and as such does not require an 'Asset Metering Complex Site Supplementary Information Form' and this is the responsibility of the Asset Metering Virtual Lead Party to arrange as part of the registration process.

Asset Differencing can be employed but only in circumstances where only one metered data value needs to be determined and all the other metered data for a Party are metered by a Code of Practice compliant Metering System. The example in Appendix A Figure 5 shows an example of this principle.
Asset Differencing works by subtracting the metered data values of the Asset Metering System(s) from the metered data values of the Boundary Point Metering System that the Dispatchable Asset is located behind. Asset Metering can be installed to measure the metered data of the Independent Load behind the Boundary Point Metering System or measure the metered data of other Dispatchable Assets of another Party behind the Boundary Point Metering System that the Dispatchable Asset is located.
The example in Table 13, below, is for determining the metered data for Asset 3 by differencing. Asset 1 and Asset 2 have Asset Metering Systems compliant with this Code of Practice and are submitting half hourly metered data.

Table 13: Example of Asset Differencing

Period	Boundary Point Metered Data (kWh)	Asset 1 Metered Data (kWh)	Asset 2 Metered Data (kWh)	Asset 3 Metered Data (kWh) – Calculated
10	4700	500	750	3450
11	5000	500	800	3700
12	3000	500	-50	2550

In order to maintain the integrity of Settlement under these arrangements it will be necessary for:

- All metered data to be submitted in a Demand Period format and measured by Code of Practice compliant Metering Systems;
- All metered data (Boundary Point Metering System and Asset Metering Systems) to be available to the Supplier Volume Allocation Agent (SVAA); and
- An aggregation rule to be made available to SVAA via the Asset registration process.

© Elexon Limited 2022

As differencing involves the Boundary Point Metering System and Asset Metering not located at the Boundary Point losses can be accounted for in the metered data determined by differencing.

The losses may be accounted for by the appropriate application of factors (i.e. Compensation values for power transformer and/or line losses) by the Data Collector as constants identified within the Asset Metering Complex Site Supplementary Information Form (CoP11/Fa) or alternatively by the Asset Meter where the functionality to compensate for power transformer and/or line losses is available[24].

12. RECORD KEEPING

The Registrant for the Asset Metering System is responsible for keeping the following records:

(i) Single Line Diagram (not required for whole current (direct connected) Asset Meters or Asset Metering Type 5);

(ii) Calibration Test Certificates for the Metering Equipment (includes Asset Meters, current transformers, and voltage transformers, as applicable). For whole current (direct connected) Asset Meters or Asset Metering Type 5 only a certificate of conformity that includes the serial number of the relevant Asset Meter installed is required;

(iii) Commissioning test results for the Asset Metering System (includes Asset Meters, current transformers, voltage transformers, as applicable);

(iv) Proving Test results for the Asset Metering System;

(v) Metering technical details (see Section 12.1) for the Asset Metering System.

This obligation is for the lifetime of the Metering Equipment making up the Asset Metering System and for such a period as a Trading Dispute[25] may occur following removal.

12.1 Metering Technical Details for Asset Metering Systems

Metering technical details shall include enough information so as to allow the Asset Metering System metered data to be processed and submitted in to Settlement. The following provides more detailed information as to what is required (this list is not exhaustive and not all items may be applicable dependant on the configuration of the Asset Metering System):

a) Asset Metering System Number (i.e. Asset Import ID or Asset Export ID);
b) Address;
   Address of the site the Asset Metering System Number is associated with.
c) Metering Equipment location;
   The actual location of the Metering Equipment within the address
d) Asset Metering Type (1, 2, 3, 4, 5 as applicable);
e) Effective from Date;
   The date the Asset Metering System was installed or configured or removed, as applicable;

[24] Where the Asset Meter is applying Compensation for power transformer and/or line losses an Asset Metering Complex Site Supplementary Information Form (CoP11/Fa) is not required.
[25] BSC Section W – Trading Disputes https://www.elexon.co.uk/the-bsc/bsc-section-w-trading-disputes/ and BSCP11 – Trading Disputes https://www.elexon.co.uk/csd/bscp11-trading-disputes/

© Elexon Limited 2022

f) Asset Meter serial numbers;
g) Asset Meter Outstation ID;
   An identifier for an Asset Meter Outstation which is programmed into the Asset Meter that is used by the Data Collector to download the metered data, alarms etc
h) Asset Meter PIN;
   The PIN is programmed into an Asset Meter to identify it where a multi-drop (daisy chaining or cascading) of multiple Asset Meters is in use.
i) Number of channels
   The number of Measured Quantities programmed into the Asset Meter, e.g. if Active Energy Import and Active Energy Export were programmed into the Asset Meter the number of channels would be two.
j) Measurement Quantity ID;
   Identifies the quantity, or quantities, which are being measured (e.g. Active Import etc)
k) Asset Meter manufacturer and type;
l) Asset Meter accuracy class;
m) Asset Meter Register ID;
   The reference ID for an Asset Meter Register, for example cumulative Active Energy Import, within an Asset Meter.
n) Asset Meter Register multipliers;
   The number by which the register reading must be multiplied to get the true register value (e.g. if a cumulative register displayed Active Energy as 12345 x 10 kWh the true Active Energy value is 123450 kWh and the Meter Register multiplier would be 10).
o) Asset Meter scaling factor value for conversion of raw metered data to a kWh or MWh value, as applicable, by an Instation.
   A scaling factor value applied by an Instation to convert the output of an Asset Meter to Active Energy values. This can be conversion of Active Power to Active Energy (e.g. for a half hour Settlement Period the scaling factor would be 0.5); or converting an instantaneous output from the Asset Meter (see example in Figure 1):

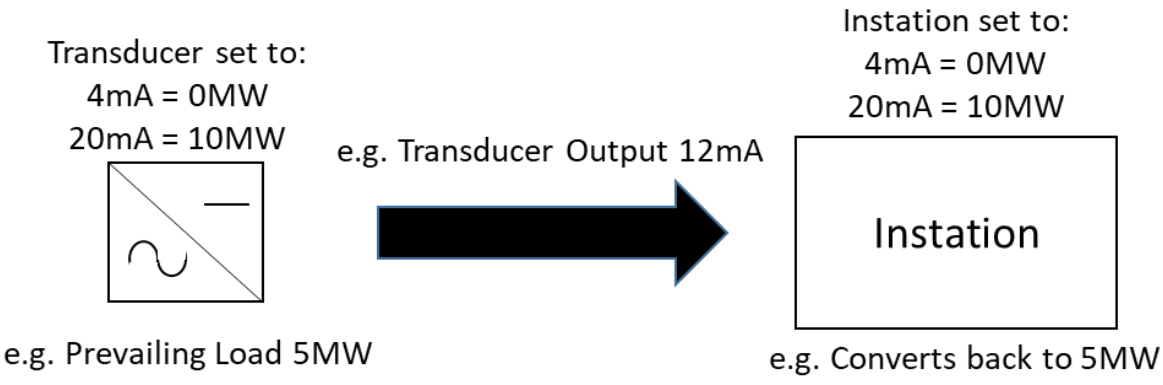

Figure 1: Example of Instation converting instantaneous output value

In this example the Instation is configured to convert the instantaneous output (mA) from a transducer by using the scaling factor programmed into the transducer converting the prevailing load value (measured on the secondary values if connected to measurement transformers and converted to primary values by the application of the measurement transformer ratios to the secondary

© Elexon Limited 2022

values) to a mA equivalent. The Instation applies the scaling factor in the opposite way to the transducer in that it will, based on the example in Figure 1, receive a 12mA value and convert it to 5MW. The Instation will still have to integrate the Active Power value to convert it to Active energy for a Settlement Period.

p) Number of Phases;
   The number of Phases on an Asset Meter (i.e. single phase, 3-phase 3-wire or 3-phase 4-wire.
q) Current transformer details (manufacturer, type, serial numbers, ratio, rated burden, accuracy class);
r) Voltage transformer details (manufacturer, type, serial numbers, ratio, rated burden, accuracy class);
s) Communications details;
   The information required by the Instation to be able to contact an Asset Meter, or any location an output is pushed to by an Asset Meter, such as method (e.g. GPRS, GSM, IP, PSTN etc, as applicable), address, baud rate etc, as applicable.
t) Push/Pull communications indicator;
   An indicator that identifies whether the Instation or the Asset Meter initiates the data collection call.
u) Passwords (all levels);
   Any password applied to the Asset Meter required to read or programme the Asset Meter. There may be multiple levels for different access.
v) Asset Metering Complex Site indicator;
   A flag confirming (Y or N) whether an aggregation rule is required and an Asset Metering Complex Site Supplementary Information Form (CoP11/Fa) is required.
w) MSID Pair ID Boundary Point Metering System ID (Import and Export (if applicable);
x) System voltage;
   The voltage of the supply to the Asset applicable to the Asset Metering System.
y) Aggregation Rule in the Asset Metering Complex Site Supplementary Information Form (CoP11/Fa) where losses are being compensated for. and;
z) Metering Dispensation details (Dispensation reference, effective from date, effective to date).

© Elexon Limited 2022

APPENDIX A – DEFINED METERING AT THE ASSET POINT

The following examples go through metering configurations for the variations allowed under this Code of Practice. The Actual Metering at the Asset Point should be in such a position so as to measure all the Dependent Load related to the Asset. This can be achieved through multiple Asset Metering Systems or by using Asset Differencing. For a Generating Unit, the Net Output can be measured by one or more Asset Metering Systems.

Figures 2 and 3 respectively show the required location of the measurement transformers of an Asset Metering System for a Dispatchable Generation Unit Asset and a Dispatchable Load demand Asset.

Figure 4 shows the use of multiple Asset Metering Systems to measure all the Dependent Load.

Figure 5 shows the use of Asset Differencing to determine the Dependent Load metered data values.

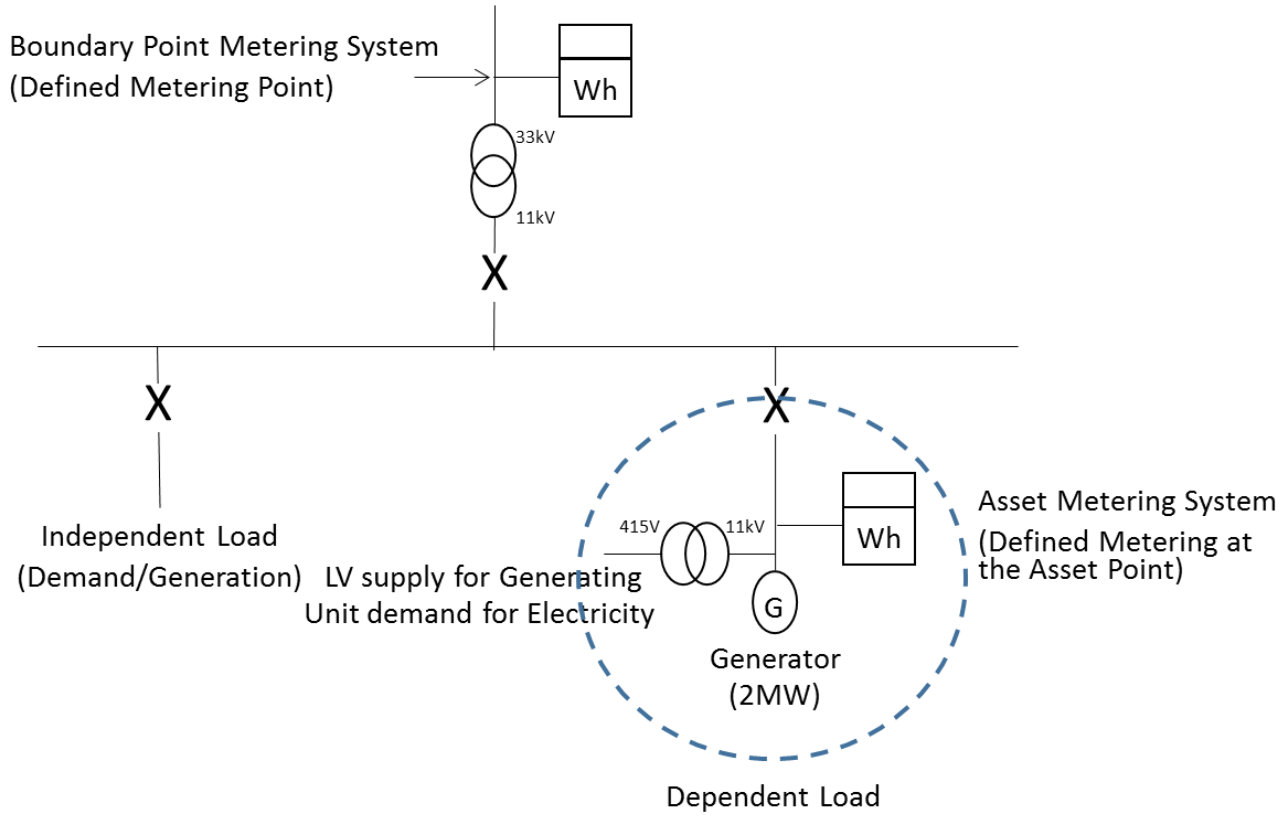

© Elexon Limited 2022

Figure 2: Asset Metering System physical location (Generating Unit Asset)

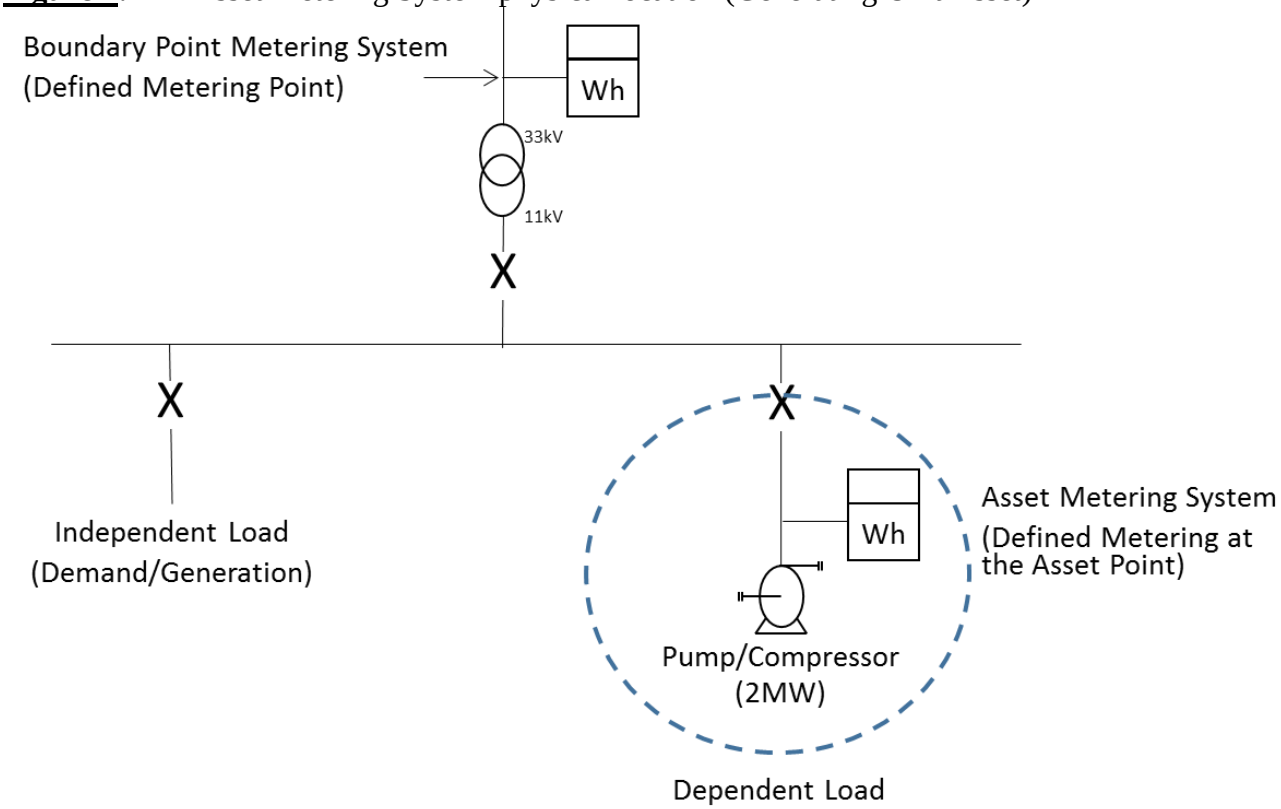

Figure 3: Asset Metering System physical location (demand Asset)

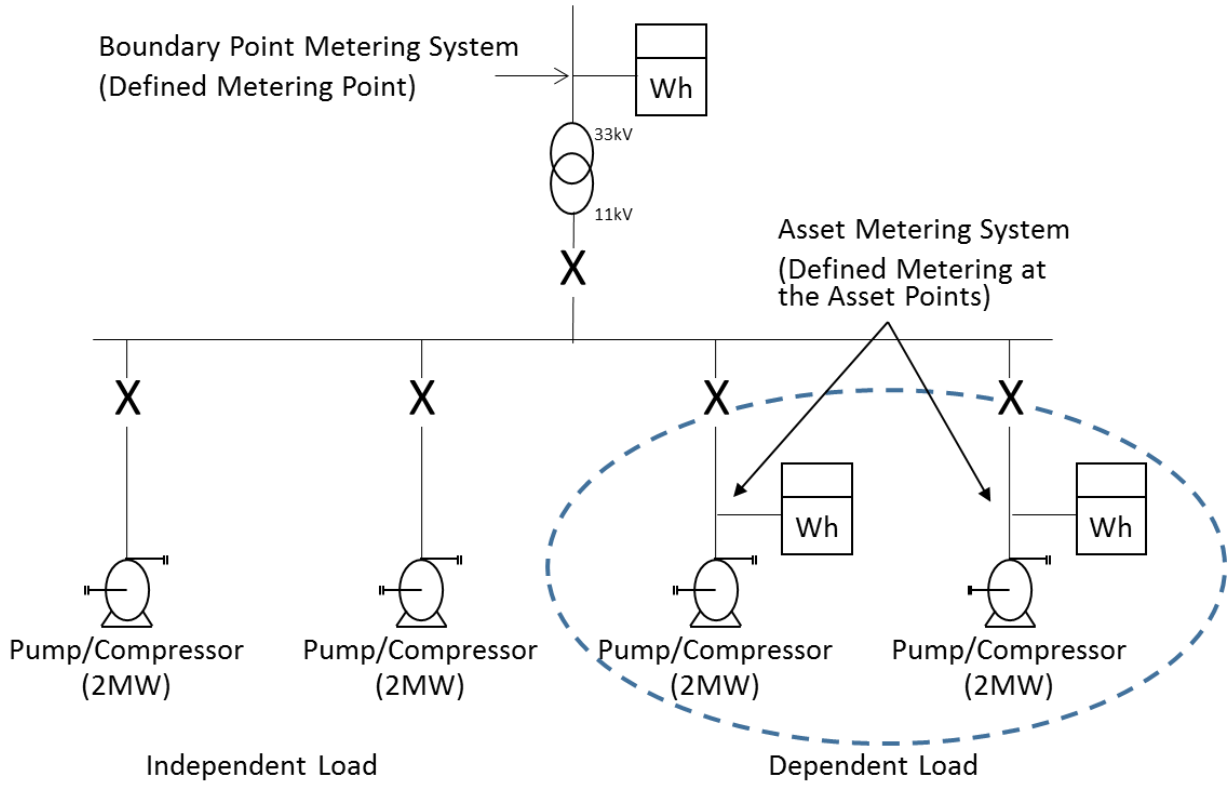

Figure 4: Multiple Asset Metering Systems physical location (demand Asset)

© Elexon Limited 2022

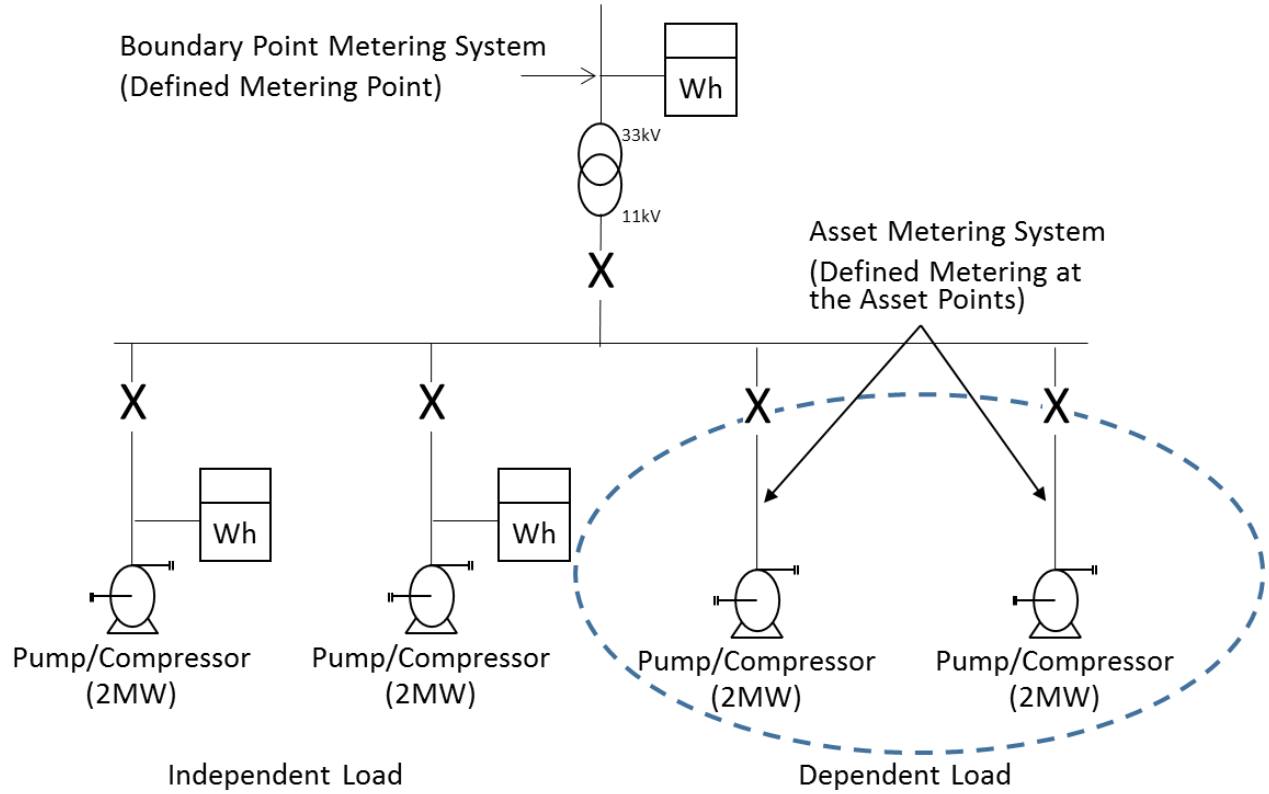

Figure 5: Asset Differencing Metering physical location of Asset Metering (demand Asset)

In the case of Asset Differencing the metered data values from the Boundary Point Metering System must be available and that Metering System must be registered in a Supplier Meter Registration Service. The metered data values for the Asset Dependent Load is determined by differencing the Boundary Point Metering System metered data values from the Asset Metering Systems measuring the metered data values of the Independent Load for the site.
The formula to derive the Asset Dependent Load metered data values would be:
Asset Dependent Load metered data = [Boundary Point Metering System (Active Energy Export – Active Energy Import)] - [Aggregated Independent Load Metering System (Active Energy Export – Active Energy Import)]

© Elexon Limited 2022

APPENDIX B – IMPORT/EXPORT CONVENTION

The convention for Asset Import and Asset Export Active Energy flows for the Asset is defined as:

Asset Export: A flow of Active Energy at any instant in time from the Asset towards the Boundary Point Metering System

Asset Import: A flow of Active Energy in any instant of time from the Boundary Point Metering System towards the Asset.

This is illustrated in Figure 6.

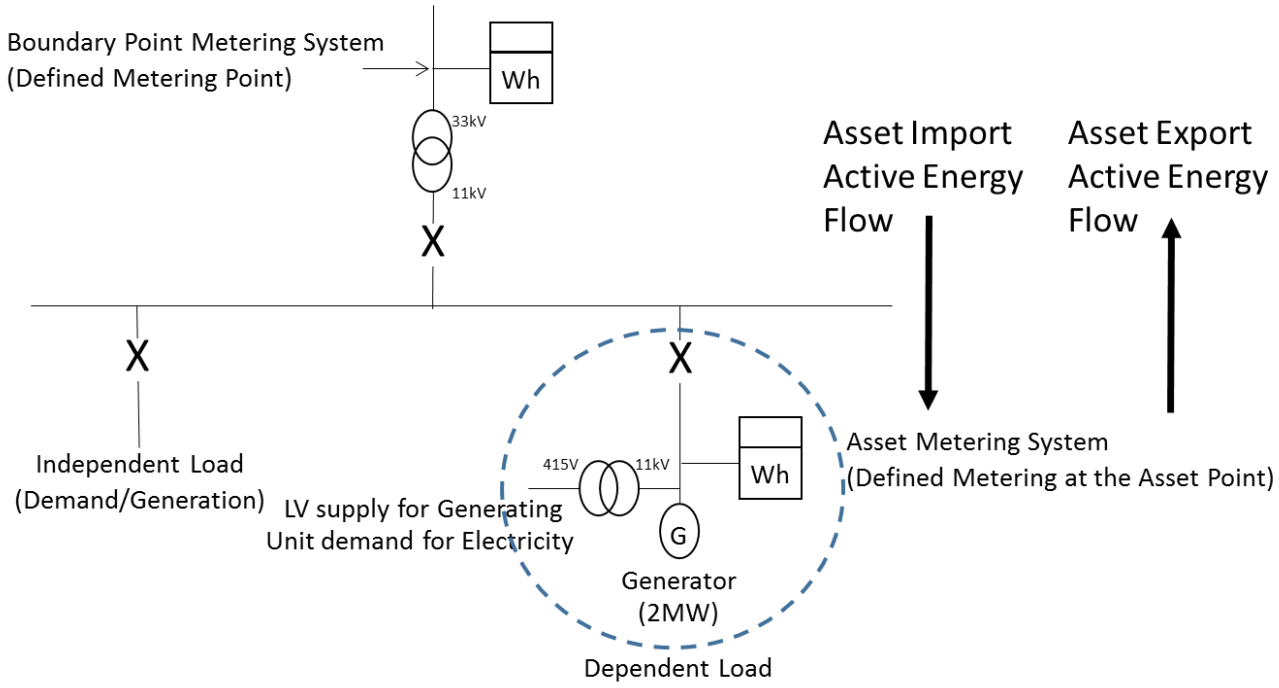

Figure 6: Asset Import and Active Energy flow example

© Elexon Limited 2022

APPENDIX C – HALF HOURLY INTEGRAL OUTSTATION / SEPARATE OUTSTATION REQUIREMENTS

This appendix is only applicable to Asset Meters that are Half Hourly Integral Outstation Meters or separate Outstations approved by the Panel in accordance with BSCP601. This approval will be for Code of Practices 1, 2, 3, 5 and 10 as applicable.

The following requirements for BSCP601 approval are taken from Codes of Practice 1, 2, 3, 5 and 10. In the event of an inconsistency between the provisions of this Code of Practice and the Code of Practice 1, 2, 3, 5 and 10 (as applicable), the provisions of Code of Practice 1, 2, 3, 5 and 10 (as applicable) shall prevail.

1. Outstation

Where separate Outstations are provided these shall each store main and check Asset Meter data for one or more circuits and where practicable shall be configured identically.

Separate Outstations storing data from different circuits may be cascaded on to one communication line.

Asset Metering Systems comprising meters with integral Outstations need not store data from the associated main or check Asset Meter.

The Outstation data shall be to a format and protocol approved by the Panel in accordance with BSCP601.

The Outstation shall have the ability to allow the metering data to be read by Instations other than the Settlement Instation provided the requirements of access to data of this Code of Practice are satisfied.

Access to metering data shall be in accordance with the provisions of the Code and the BSC Procedures referred to therein. Such access must not interfere with or endanger the security of the data or the collection process for Settlement purposes.

Access to stored metering data in Outstations shall also be the right of the Registrant and any party who has the permission of the Registrant.

Facilities shall be provided to select a relevant Demand Period from one of the following values:-

(i) 30, 20, 15, 10 and 5 minutes with one demand period ending on the hour.

Normally metering data will be collected by the Settlement Instation by a daily interrogation, but repeat collections of metering data shall be possible throughout the Outstation data storage period.

Where the circuit the Asset Meter is connected to is not normally energised, the Outstations shall be fitted with an auxiliary terminal that provides for the Outstation's energisation for remote interrogation purposes.

© Elexon Limited 2022

Where a separate modem associated with the Outstation system is used, then it shall be provided with a secure supply separately fused. Alternatively, line or battery powered modem types may be used.

The Outstations shall provide an alarm output signal at a manned point in the event of a supply failure.

2. Displays

The Metering Equipment shall display the following primary information (not necessarily simultaneously):

(i) Mandatory Displays:

(a) Measured quantities as per clause 4;
(b) Current time ("UTC") and date;
(c) Measurement transformer ratios (see Section 6.1); and
(d) Any Compensation factor which has been applied for measurement transformer errors and/or system losses, where this is a constant factor[26] applied at security level 3 (i.e. where the Asset Meter is combined with the display and/or Outstation).

Asset Metering Equipment shall be capable of enabling the display of the following, as specified by the Registrant:

(ii) Display capabilities:

(a) Maximum Demand (MD) for kW or MW as appropriate per programmable charging period i.e. monthly or statistical review period;
(b) Maximum Demand (MD) for kVA or MVA as appropriate per programmable charging period i.e. monthly or statistical review period;
(c) Twice the kWh advance or MWh advance as appropriate since the commencement of a current Demand Period (i.e. kW or MW rising demand);
(d) Cumulative MD;
(e) Number of MD resets; and
(f) Multi-rate display sequence as specified by the Registrant with a minimum of 8 rates selectable over the calendar year. MD shall be resettable at midnight of the last day of the charging period and for part chargeable period demands. If a manual reset button is provided then this shall be sealable;
(g) Indication of reverse running for Active Energy, where appropriate for Asset Metering Types 3 and 4.

[26] This excludes cases where a dynamic range of Compensation factors have been applied

© Elexon Limited 2022

3. Data storage

Data storage facilities for metering data shall be provided as follows:-

(i) A storage capacity of 48 periods (assuming 30 minute Demand Period) per day for a minimum of 10 days for Asset Metering Types 1 and 2 and 20 days for Asset Metering Types 3 and 4 for all Demand Values;

(ii) The stored Demand Values shall be integer values of kW/MW or kvar/Mvar as appropriate, or pulse counts, and have a resolution of better than +0.1% (at full load);

(iii) The accuracy of the energy values derived from Demand Values shall be within +0.1% (at full load) of the amount of energy measured by the associated Asset Meter;

(iv) The value of any energy measured in a Demand Period but not stored in that Demand Period shall be carried forward to the next Demand Period;

(v) Where a separate Outstation is used, cumulative register values shall be provided in the Outstation which can be set to match and increment with the Meter Registers;

(vi) In the event of an Outstation supply failure, the Outstation shall protect all data stored up to the time of the failure, and maintain the time accuracy in accordance with Appendix C clause 4 (Time Keeping);

(vii) Partial Demand Values, those in which an Outstation supply failure and/or restoration occurs, and zero Demand Values associated with an Outstation supply failure, shall be marked so that the Instation can identify them;

(viii) To cater for continuous supply failures, the clock, calendar and all data shall be supported for a period of 10 days for Asset Metering Types 1 and 2 and 20 days for Asset Metering Types 3 and 4 without an external supply connected;

(ix) Any "read" operation shall not delete or alter any stored metered data; and

(x) An Outstation shall provide any portion of the data stored upon request by an Instation.

4. Time Keeping

(i) The Outstation time shall be set to the Co-ordinated Universal Time (UTC) also known as Greenwich Mean Time (GMT). No switching between UTC and British Summer Time (BST) shall occur

(ii) Time synchronisation of the Outstation shall only be performed by communication with the Instation.

(iii) The overall limits of error for the time keeping allowing for a failure to communicate with the Outstation for an extended period of 10 days for Asset Metering Types 1 and 2 and 20 days for Asset Metering Types 3 and 4 shall be:-

(a) the completion of each Demand Period shall be at a time which is within ± 10 seconds of UTC for Asset Metering Types 1 and 2 or ± 20 seconds of UTC for Asset Metering Types 3 and 4; and

(b) the duration of each Demand Period shall be within ± 0.1%, except where time synchronisation has occurred in a Demand Period.

5. Monitoring Facilities

Monitoring facilities shall be provided for each of the following conditions and shall be reported, tagged wherever possible to the relevant Demand Period(s), via the local interrogation facility:-

(i) phase failure of any one or combination of phases;

© Elexon Limited 2022

(ii) Metering Equipment resets caused by other than a supply failure (where fitted);
(iii) Error in Outstation functionality;
(iv) Battery monitoring (where battery fitted);
(v) Interrogation port access which changes time and/or date;
(vi) Where different from (v), Demand Period(s) which have been truncated or extended by a time synchronisation;
(vii) Interrogation port access which changes data other than time and/or date; and
(viii) reverse running (if fitted).

In addition all of the above conditions shall be reported as, at minimum, a common alarm indication via the remote interrogation facility.

6. Communications

For integral Outstations: Outstation(s) shall accommodate both local and remote interrogation facilities, from separate ports.
To prevent unauthorised access to the data in the Metering Equipment a security scheme, as defined below, shall be incorporated for both local and remote access. Separate security levels shall be provided for the following activities:
(i) Level 1 Password for:
Read-only access to the following metering data, which shall be transferrable on request during the interrogation process:
(a) Outstation ID;
(b) Demand Values as defined in Section 4;
(c) Cumulative Measured Quantities as defined in Section 4;
(d) Maximum Demand (MD) for kW/MW or kVA/MVA as appropriate per programmable charging period i.e. monthly or statistical review period;
(e) Multi-rate cumulative Active Energy as specified by the Registrant;
(f) Measurement transformer ratios, where appropriate (see Section 6.1);
(g) Measurement transformer error correction factor and/or system loss factor where this is a constant factor applied to the entire dynamic range of the Asset Meter and the Asset Meter is combined with the display and/or Outstation;
(h) Alarm indications; and
(i) Outstation time and date.

(ii) Level 2 Password for:

(a) Corrections to the time and/or date; and
(b) Resetting of the MD.

(iii) Level 3 Password for:
Programming of:
(a) Displays and facilities as defined in Appendix C clause 2;
(b) Measurement transformer ratios, as appropriate (see Section 6.1);
(c) Measurement transformer error correction and/or system loss factor where this is a constant factor applied to the entire dynamic range of the Asset Meter and the Asset Meter is combined with the display and/or Outstation; and
(d) Passwords for levels 1, 2 and 3.

© Elexon Limited 2022

In addition it shall be possible to read additional information within the Metering Equipment to enable the programmed information to be confirmed.

(iv) Level 4 Password for

(a) Calibration of the Metering Equipment;
(b) Setting the measurement transformer ratios, where appropriate (see Section 6.1);
(c) Setting the transformer error correction and/or system loss factors where this is other than a single factor; and
(d) Programming the level 3 Password and the level 4 Password if appropriate.

In addition to the functions specified for each level it shall be feasible to undertake the functions at the preceding level(s); e.g. at level 3 it shall also be possible to carry out the functions specified at levels 1 and 2. This need not apply at level 4 when access is obtained via removing the cover. Different Passwords shall be utilised for each level, which shall only be circulated in accordance with the relevant BSC Procedure.

For separate Outstations: A Password shall be required to read or change any data.

The Passwords specified in Appendix C clause 6 shall be subject to the following additional requirements:

(i) The communications protocol employed shall ensure that the Password offered determines the level of access to the data within the Metering Equipment.
(ii) A counter to log the number of illegal attempts (i.e. Password comparison failures) to access Metering Equipment via the local and remote ports shall be incorporated into the log-on process. This counter shall reset to zero at every hour change (i.e. 0100, 0200 etc).
(iii) If the counter reaches 7, then access is prohibited at all levels until the counter resets at the next hour change.

7. Local Interrogation

An interrogation port shall be provided for each Outstation which preferably shall be an optical port to BS EN/IEC 62056-21, and with a serial protocol such as BS EN/IEC 62056-21, for the following purposes:-

(i) Commissioning, maintenance and fault finding;
(ii) Transfer of metering data and alarms; and
(iii) Time setting.

8. Remote Interrogation

Remote interrogation shall be provided with error checking of the communications between the Outstation System and the Instation.

Interrogation of an Outstation shall be possible using one of the following media (future proofing and the end of life timeline for a communications method should be considered when choosing a communications option):-

(i) Switched telephone networks e.g. PSTN or CTN;
(ii) Public data networks e.g. PSN;
(iii) Internet Protocol;
(iv) Global System for Mobile communications (GSM);
(v) Radio data networks e.g. Paknet or any equivalent;
(vi) Customer's own network;

© Elexon Limited 2022

(vii) Mains signalling / power line carrier;
(viii) Low power radio;
(ix) Satellite; or
(x) Cable TV.

In addition any further media may be used as approved by the Panel.

The data shall be to a format and protocol approved by the Panel in accordance with BSCP601.

© Elexon Limited 2022

APPENDIX D – COMMISSIONING REQUIREMENTS

Commissioning shall be performed on all new Metering Equipment which is to provide metering data for Settlement.

The commissioning requirements are split between Asset Meters that are whole current (direct connected) and that are measurement transformers (current and voltage transformers) connected.

It is the responsibility of the Registrant to ensure that the installer is suitably trained and qualified to install and commission Asset Metering equipment behind the Boundary Point Metering System; this shall include working in a domestic location where applicable.

1. Whole current (direct connected) Asset Metering Systems (including Asset Metering Type 5):

    - The installer will confirm that remote communication with the relevant Settlement Instation has been established;

    - The installer will confirm that the direction of power flow is the same as is registered against the Asset Metering System for Settlement (Import or Export);

    - The installer will confirm phase rotation is standard at the Asset Meter terminals, or the incoming terminals to the equipment that the Embedded Metering Device is embedded within;

    - The installer will confirm that the polarity is standard at the Asset Meter terminals, or the incoming terminals to the equipment that the Embedded Metering Device is embedded within; and

    - The installer will confirm that the Metering Equipment detects and operates any alarms required by this Code of Practice.

2. Measurement transformers (current and voltage transformers) Asset Metering Systems:

    The Equipment Owner shall be responsible for ensuring the requirements of this Appendix D, are performed on its Metering Equipment up to and including the testing facilities, if fitted; where not fitted this will be to the Asset Meter or a point where the Asset Meter can be isolated from the measurement transformers. In addition that Party shall prepare, and make available upon request, complete and accurate commissioning records in relation to these obligations. Where measurement transformers are owned by the Registrant or Asset Meter installer it shall be responsible for the Commissioning of all Metering Equipment.

    This section assumes that the measurement transformers may not be owned by the installer of the Asset Meter or the Registrant. The Equipment Owner is the responsible Party for equipment housing measurement transformers associated with the Asset Metering System. Where this is not another Party, the following requirements will be the responsibility of the Registrant via its appointed Asset Meter installer.

    - The Equipment Owner will confirm that the current transformers match the ratio and polarity declared to the installer of the Asset Meter on all relevant documentation;

© Elexon Limited 2022

- The Equipment Owner will confirm that the voltage transformers match the ratio and polarity declared to the installer of the Asset Meter on all relevant documentation;
- The Equipment Owner will confirm that the relationships between voltages and currents are correct and that phase rotation is standard at the testing facilities, if fitted; or at the Asset Meter or a point where the Asset Meter can be isolated from the measurement transformers;
- The Equipment Owner will measure and record the burdens on the measurement transformers up to the testing facilities, if fitted; or at the Asset Meter or a point where the Asset Meter can be isolated from the measurement transformers;
- The installer of the Asset Metering will confirm that the relationships between voltages and currents are correct and that phase rotation is standard at the Asset Meter terminals;
- The installer of the Asset Metering will measure and record the burdens on the measurement transformers from the testing facilities, if fitted or a point where the Asset Meter can be isolated from the measurement transformers, to the Asset Meter and ensure that the overall burden on the measurement transformers does not exceed the rated burden. Where the Equipment Owner has measured and recorded the burden up to the Asset Meter the installer does not have to repeat this test.;
- The installer of the Asset Meter will confirm that the Asset Meters are set to the same current transformer and voltage transformer ratios as declared by the Equipment Owner on all relevant documentation;
- The installer of the Asset Meter will confirm that the Asset Meters have the correct Compensation for errors in the measurement transformers/connections and losses in power transformers where appropriate;
- The output of the Asset Metering System correctly records the energy in the primary system at the Defined Metering at the Asset Point; and
- The installer of the Asset Meter will confirm that the Metering Equipment detects and operates the alarms required by this Code of Practice if applicable.

Where individual items of Metering Equipment are to be replaced then only those items are required to be Commissioned. For clarification, Asset Metering Systems in their entirety need not be re-Commissioned when items are replaced within that system.

Current transformers[27] integrated in low voltage cut outs or switchgear may be partially Commissioned off site, provided there is no further alteration to the Metering Equipment following Commissioning and provided that this is done in accordance with Appendix D of this Code of Practice (other than the requirement that the Commissioning be performed on site). On site Commissioning tests will still be required on site by the Equipment Owner/Asset Meter installer to ensure all of the obligations under Appendix D of this Code of Practice are met[28]. Tamper evident seals shall be used following off site Commissioning and these shall be replaced on site by seals as specified in Section 8 once Commissioning is complete.

[27] Where current transformers are of a multi-ratio design, then the responsible Commissioning party will be required to complete elements of Commissioning on-site (and post installation) to ensure the correct ratio has been selected.

[28] For the avoidance of doubt, where current transformers are Commissioned off site then the Equipment Owner will not be required to complete additional tests outside of the scope of Appendix D of this CoP. The Asset Meter installer testing should not be altered by off-site Commissioning of current transformers integrated in low voltage cut-outs or switchgear.

© Elexon Limited 2022

3. Commissioning by comparison to the Boundary Point

Where the Boundary Point Metering System can show the impact of the Dispatchable Asset a comparison between the Asset Meter, with the Asset despatched, and the Boundary Point Metering System can be used in lieu of measurement transformer commissioning tests. This comparison is a one off test for the purposes of validating an Asset Metering System for measurement transformer commissioning; the use of this method is not mandatory and is not applicable to whole current (direct connected) Asset Meters and Asset Metering Type 5. For the avoidance of doubt commissioning of the Asset Meter is still required to be completed.

The criteria that must be met to use this technique are as detailed below:

- Half hourly metered data from the Boundary Point Metering System for the Demand Period the Asset was despatched in and all relevant baseline periods must be available;
- Any baseline period where the Asset has been despatched must be provided and these discounted from the determination of the baseline period value;
- Any Independent Load behind the Boundary Point Metering System must not change its mode of operation during the period the Asset is despatched for a Commissioning test; and
- The electrical losses between the Defined Metering at the Asset point and the Defined Metering Point of the Boundary Point Metering System shall be calculated to demonstrate the losses will have no significant impact on the comparison of metered data.

The baseline periods required are:

Where the Asset is dispatched on a working day the same Demand Period for the previous seven working days, and in addition the three previous and three subsequent Demand Periods for each day; **OR**

Where the Asset is dispatched on a non-working day that is a Saturday the same Demand Period for the previous seven Saturdays, and in addition the three previous and three subsequent Demand Periods for each day; **OR**

Where the Asset is dispatched on a non-working day that is a Sunday the same Demand Period for the previous seven Sundays, and in addition the three previous and three subsequent Demand Periods for each day;

If the Asset is dispatched on a Bank Holiday this will be treated as a Sunday.

The baseline periods for the Boundary Point Metering System will be averaged and the difference between the average and the Demand Period the Asset was dispatched will be used as a comparison with the Asset Metering System Metered Volumes from the period the Asset was dispatched.

Any baseline periods where the Asset has been dispatched shall be accounted for.

The comparison between the half hourly metered data in the period the Asset is dispatched and the Boundary Point Metering System deviation in the same period from the Boundary Point Metering System baseline period average must be within ±5%.

© Elexon Limited 2022

If a Commissioning test was carried out on the 18th July 2019 and the Asset was dispatched in Settlement Period (SP in table below) 28 the baseline periods required would be as illustrated in Table 14 below:

Table 14: Commissioning by Comparison to the Boundary Point Example

	BASELINE PERIODS (Boundary Point Metering System kWh)							**COMMISSIONING PERIODS**
Date / SP	09/07/19	10/07/19	11/07/19	12/07/19	15/07/19	16/07/19	17/07/19	18/07/19
SP25	466	486	466	462	441	453	450	466
SP26	465	476	480	476	449	460	463	470
SP27	456	483	477	480	453	459	466	468
SP28	457	494	487	475	440	465	472	250
SP29	453	501	481	480	450	466	468	480
SP30	480	491	469	469	445	470	472	472
SP31	471	480	472	474	452	458	458	469

Taking the average of SP28 during the baseline period in this example we would get a figure of 470kWh ((ΣSP28)/7). The difference between the baseline period average and the Demand Period the Asset was dispatched is 220kWh (i.e. 470kWh – 250kWh).

So long as the Asset Meter has recorded 220kWh ±11kWh (i.e. ±5% tolerance limit allowed) the Commissioning test will have been passed.

In this example the Asset was not dispatched during any of the Baseline Periods; should it have been this will have to be accounted for in the baseline period averaging calculation.

All Demand Periods used for this Commissioning technique and the calculations carried out to prove compliance shall be available for inspection by the Panel or Technical Assurance Agent.

© Elexon Limited 2022

APPENDIX E – SINGLE LINE DIAGRAM REQUIREMENTS

The Single Line Diagram must include the location of the Boundary Point Metering System and the associated identifiers. For the Import this will be the Import Meter Point Administration Number (MPAN) for a Metering System registered in the Supplier Meter Registration Service; should the site be registered for export for the Export this will be the Export MPAN for a Metering System registered in the Supplier Meter Registration Service.

It should also show the location of all Asset Metering Systems and what is Dependent Load and Independent Load.

The Single Line Diagram shall be available for inspection by the Panel or Technical Assurance Agent.

Figure 7 shows an example of what is required.

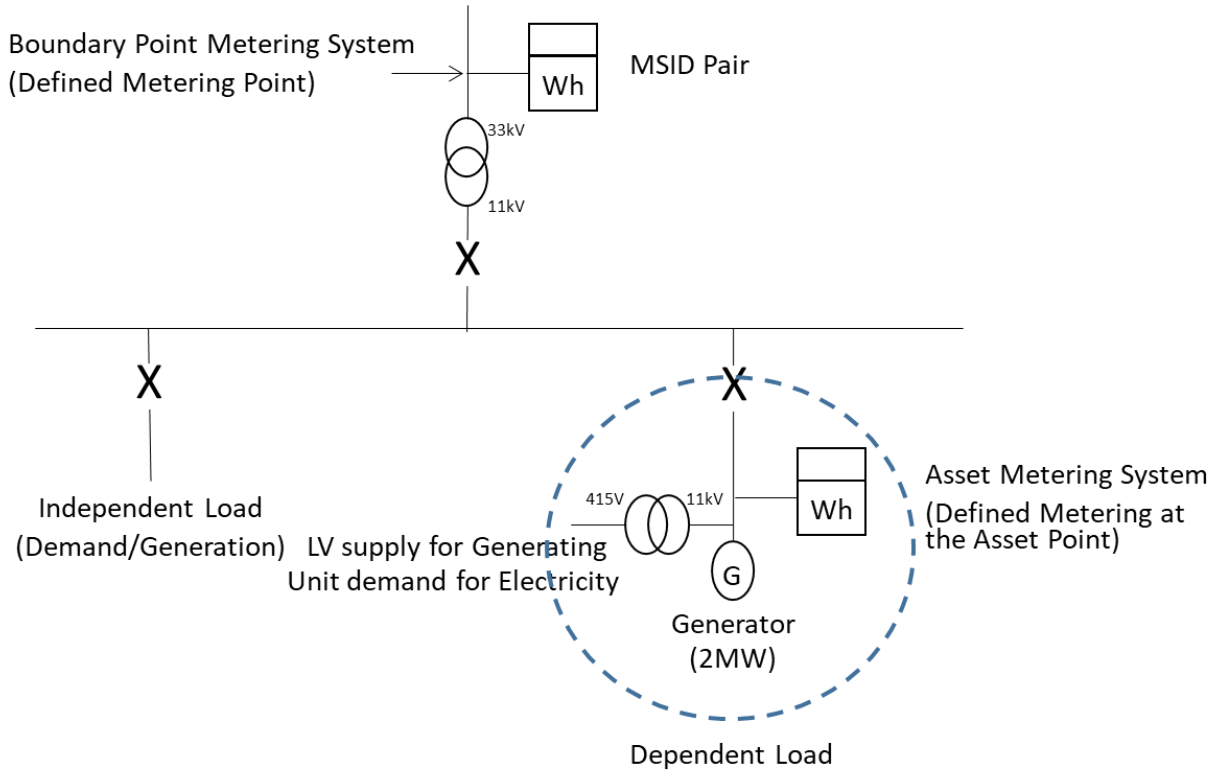

Figure 7: Single Line Diagram example

© Elexon Limited 2022

APPENDIX F – ASSET METERING COMPLEX SITE SUPPLEMENTARY INFORMATION FORM (COP11/FA)

There are two scenarios where an Asset Metering Complex Site Supplementary Form should be used:

1. System Losses – Where the Asset Meter is not located at the Defined Metering at the Asset Point and an electrical loss factor has been applied[29] to account for equipment and cabling between the Actual Metering at the Asset Point and the Defined Metering at the Asset Point; and
2. Inverter and Rectifier Losses – Where the location of the Asset Meter, where it is Asset Metering Type 5, is in such a place that it does not account for the losses of the inverter or rectifier.

1) System Losses

Where the Asset Meter is not located at the Defined Metering at the Asset Point and a loss factor needs to be applied (only where a constant factor is applied and the Asset Meter is not applying the loss factor) to account for equipment and cabling between the Actual Metering at the Asset Point and the Defined Metering at the Asset Point these losses must be accounted for in the aggregation rule using the Asset Metering Complex Site Supplementary Information Form (CoP11/Fa). The system losses must be independently verified and results made available for inspection by the Panel or Technical Assurance Agent.

Where the Asset Metering System ID is 1234567890111 and the losses between the Actual Metering at the Asset Point and the Defined Metering at the Asset Point have been calculated as 2% the aggregation rule would be:

Asset 1234567890111 = 1234567890111 x 1.02

One Asset Metering System ID (Import) should be listed in the Asset Metering Complex Site Supplementary Form.

2) Inverter or Rectifier Losses

Where the equipment is converting a.c. electrical quantities to d.c. electrical quantities, or the equipment is converting d.c. electrical quantities to a.c. electrical quantities, and the Embedded Metering Device is not in such a place within the product to account for any losses associated with the inverter or rectifier these losses must be accounted for in the aggregation rule using the Asset Metering Complex Site Supplementary Information Form (CoP11/Fa). The losses in the inverter and/or rectifier must be independently verified and results made available for inspection by the Panel or Technical Assurance Agent.

Where the Asset Metering System ID is 1234567890333 and the losses associated with the inverter have been independently verified as 5% the aggregation rule would be:

Asset 1234567890333 = 1234567890333 x 0.95

One Asset Metering System ID (Import) should be listed in the Asset Metering Complex Site Supplementary Form.

[29] Subject to an approved Metering Dispensation as per BSCP32 being in place.

© Elexon Limited 2022

CoP11/Fa Asset Metering Complex Site Supplementary Information Form (CoP11/Fa)

From MOA To Data Collector Boundary Point Metering System ID (1) **IMPORT/EXPORT*** Boundary Point Metering System ID (2) **IMPORT/EXPORT*** Boundary Point Metering System ID (3) **IMPORT/EXPORT*** Asset Metering System ID (1) **IMPORT/EXPORT*** Asset Metering System ID (2) **IMPORT/EXPORT*** Asset Metering System ID (3) **IMPORT/EXPORT*** Address of site	Metering System Arrangement Description
Aggregation Rule Effective from Date	
Notes: *** Delete as appropriate** Add Asset Metering System IDs as required. Import and Export MSIDs shall be listed on separate rows.	
Signature: …… Date: …… Name: ……	

© Elexon Limited 2022